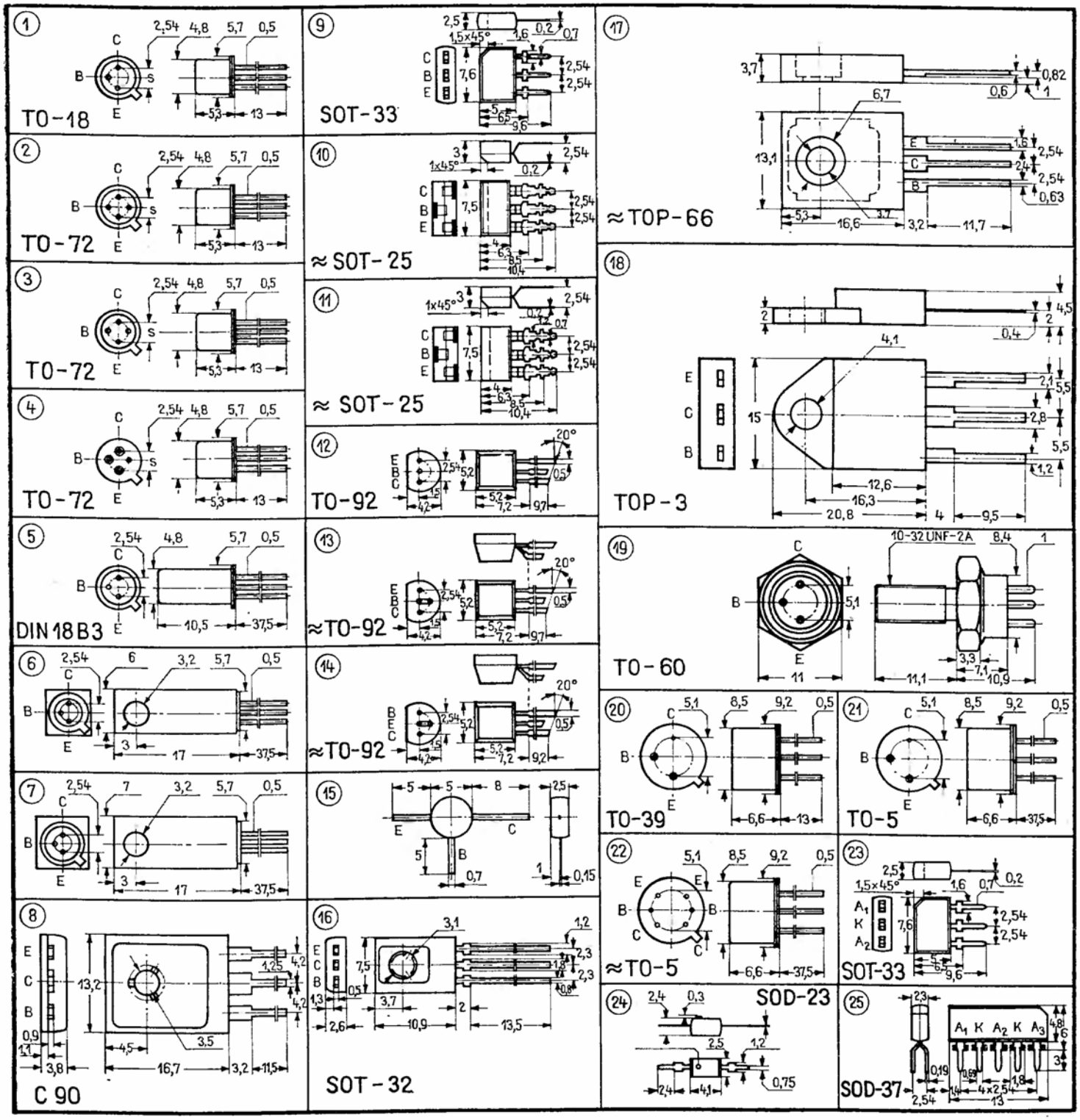
1
TO-18
2
TO-72
3
TO-72
4
TO-72
5
DIN 18 B3
6
7
8
C 90
9
SOT-33
10
≈ SOT-25
11
≈ SOT-25
12
TO-92
13
≈TO-92
14
≈TO-92
15
16
SOT-32
17
≈TOP-66
18
TOP-3
19
TO-60
20
TO-39
21
TO-5
22
≈TO-5
23
SOT-33
24
SOD-23
25
SOD-37

TO-3

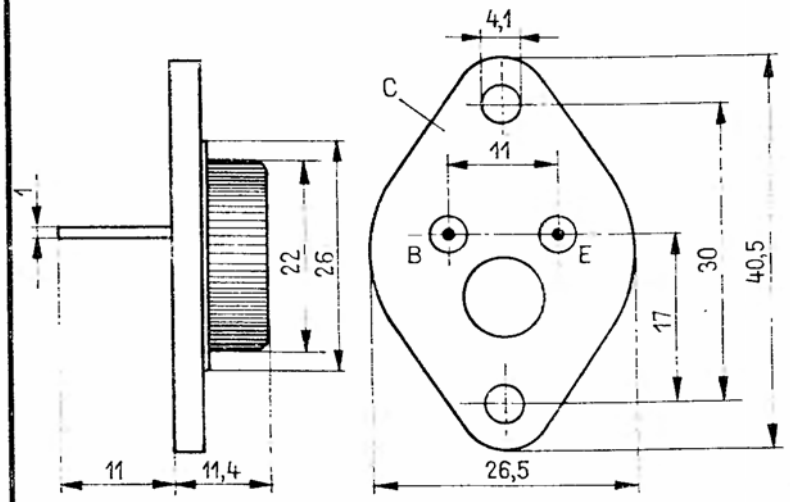


(26)

SOT-9

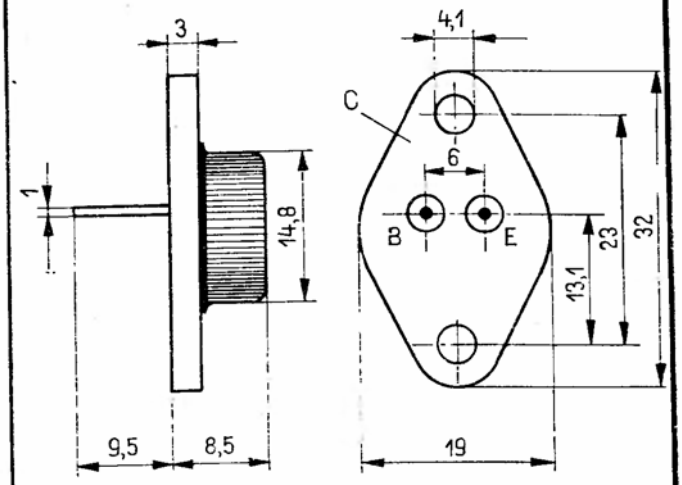


(27)

SOT-48

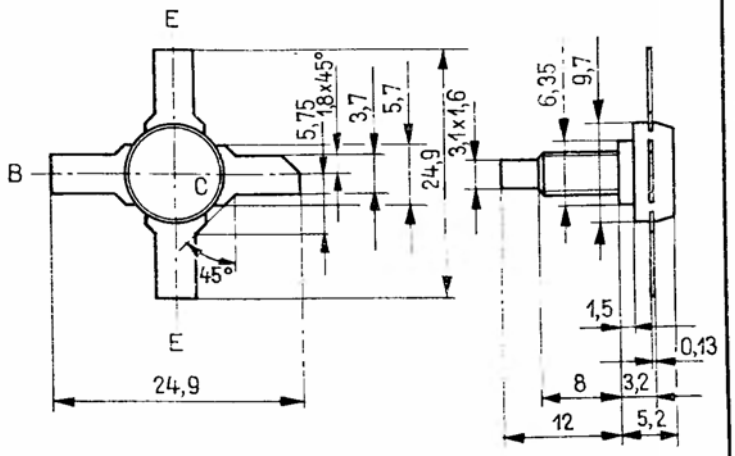


(28)

TO-66

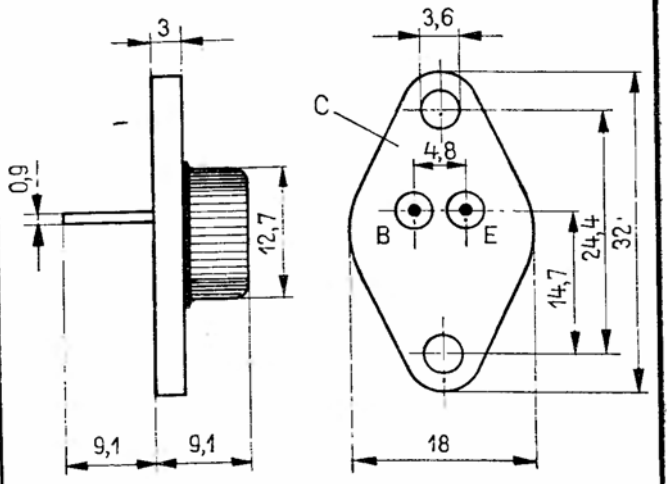


(29)