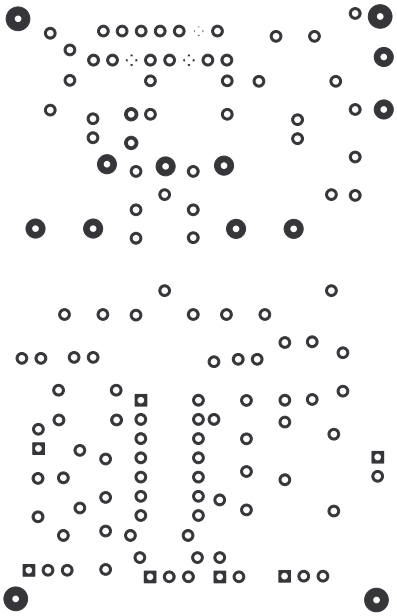

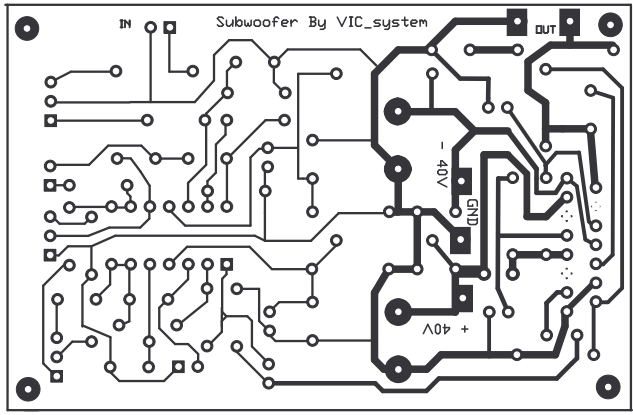
Subwoofer By VIC_system
IN
OUT
- 40V
GND
+ 40V

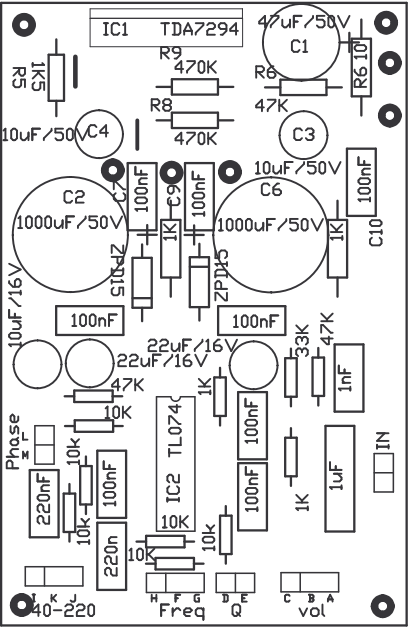
IC1 TDA7294
47uF/50V
C1
R9
470K
R6
47K
R6 10
R5
1K5
R8
470K
10uF/50V
C4
C3
10uF/50V
C6
C2
1000uF/50V
1000uF/50V
C7
100nF
C9
100nF
100nF
C10
1K
1K
ZPD15
ZPD15
10uF/16V
100nF
100nF
22uF/16V
22uF/16V
33K
47K
1nF
47K
1K
10K
TL074
IC2
100nF
Phase
10k
220nF
100nF
100nF
1K
1uF
IN
10K
10k
10K
10k
220n
L K J
40-220
H F G
Freq
D E
Q
C B A
vol