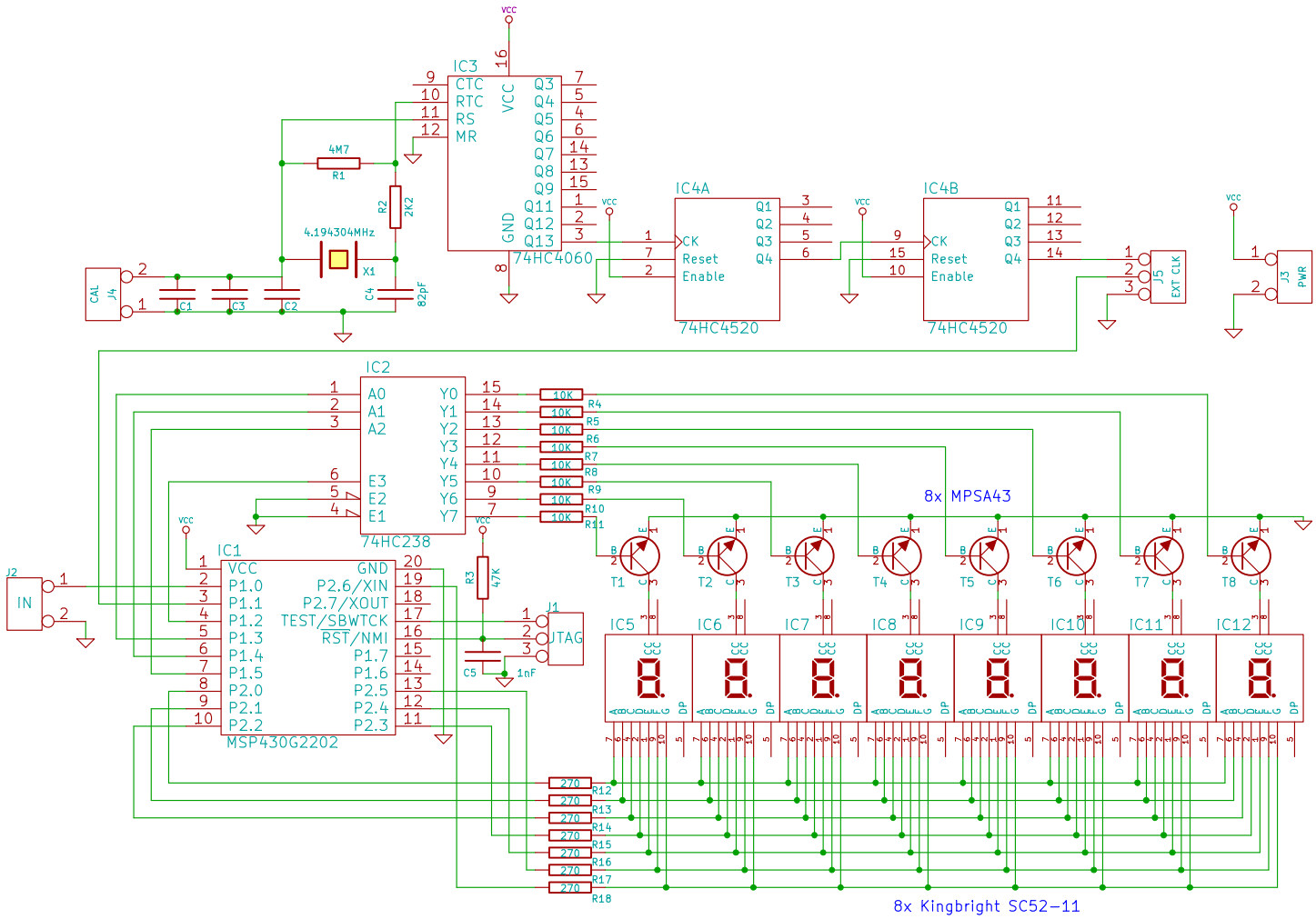

File: FR002.sch		
Sheet: /		
Title:		
Size: A4	Date: 14 mar 2013	**Rev:**
KiCad E.D.A. eeschema (2012-01-19 BZR 3256)-stable		Id: 1/1