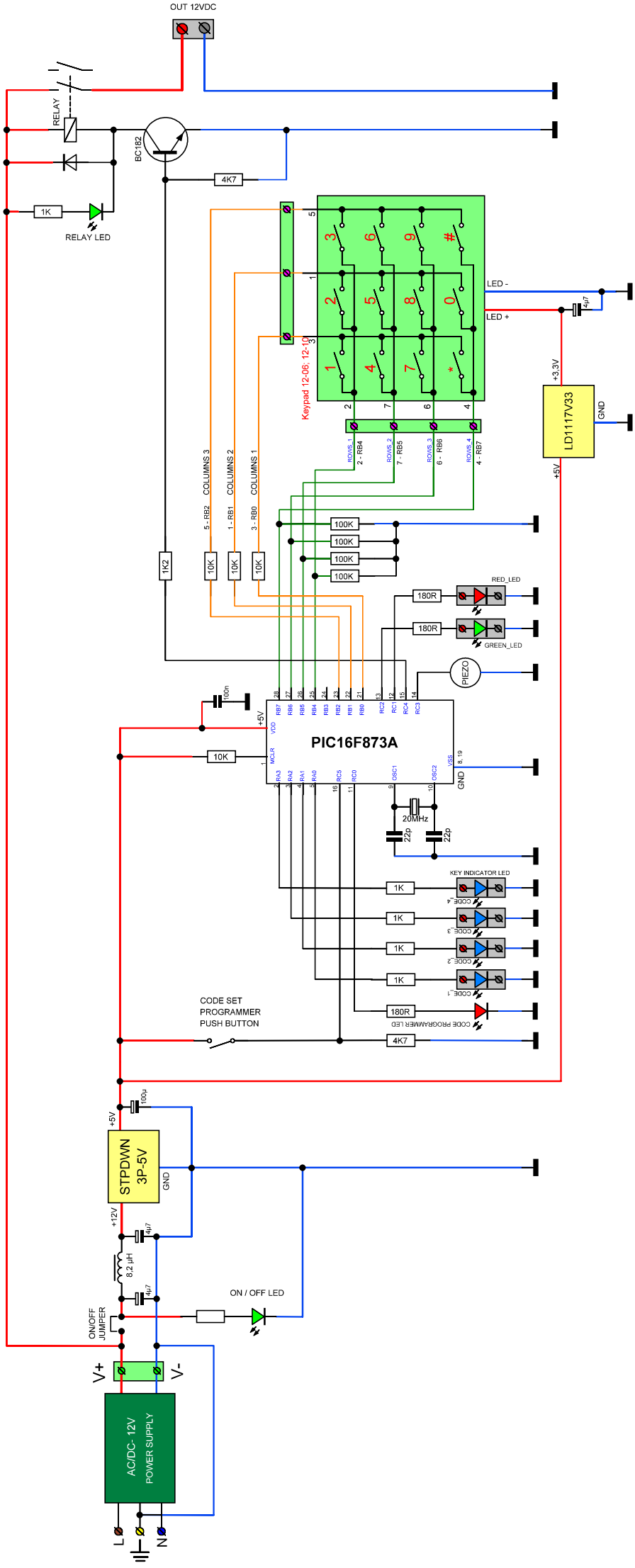
OUT 12VDC
RELAY
BC182
4K7
1K
RELAY LED
Keypad 12-06; 12-10
LED -
LED +
4µ7
+3.3V
LD1117V33
GND
+5V
ROWS_1
2 - RB4
ROWS_2
7 - RB5
ROWS_3
6 - RB6
ROWS_4
4 - RB7
COLUMNS 3
5 - RB2
COLUMNS 2
1 - RB1
COLUMNS 1
3 - RB0
100K
10K
1K2
180R
RED_LED
GREEN_LED
PIEZO
100n
PIC16F873A
20MHz
22p
KEY INDICATOR LED
CODE_4
CODE_3
CODE_2
CODE_1
CODE PROGRAMMER LED
CODE SET
PROGRAMMER
PUSH BUTTON
100µ
STPDWN
3P-5V
+12V
8,2 µH
ON / OFF LED
ON/OFF
JUMPER
V+
V-
AC/DC- 12V
POWER SUPPLY
L
N