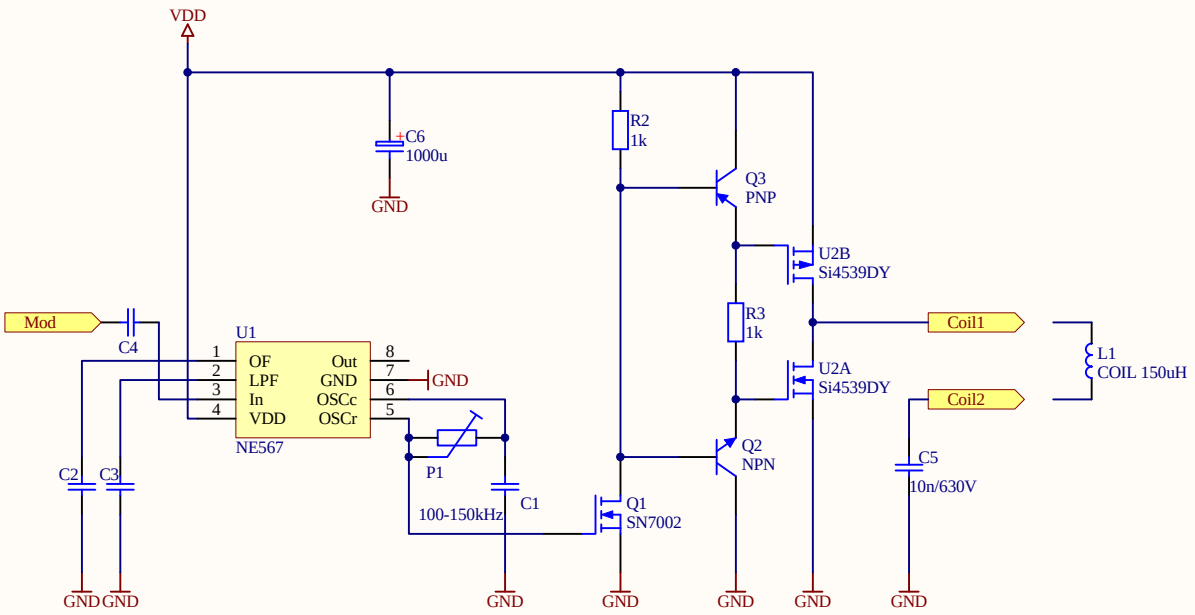

Title		
Propeller Clock Coil Driver		
Size: A4	Number	Revision: 1.0
Date: 2010.11.07.		Sheet of
File: W:\Projects\..\Coil Driver.SchDoc		Drawn By: sysypet