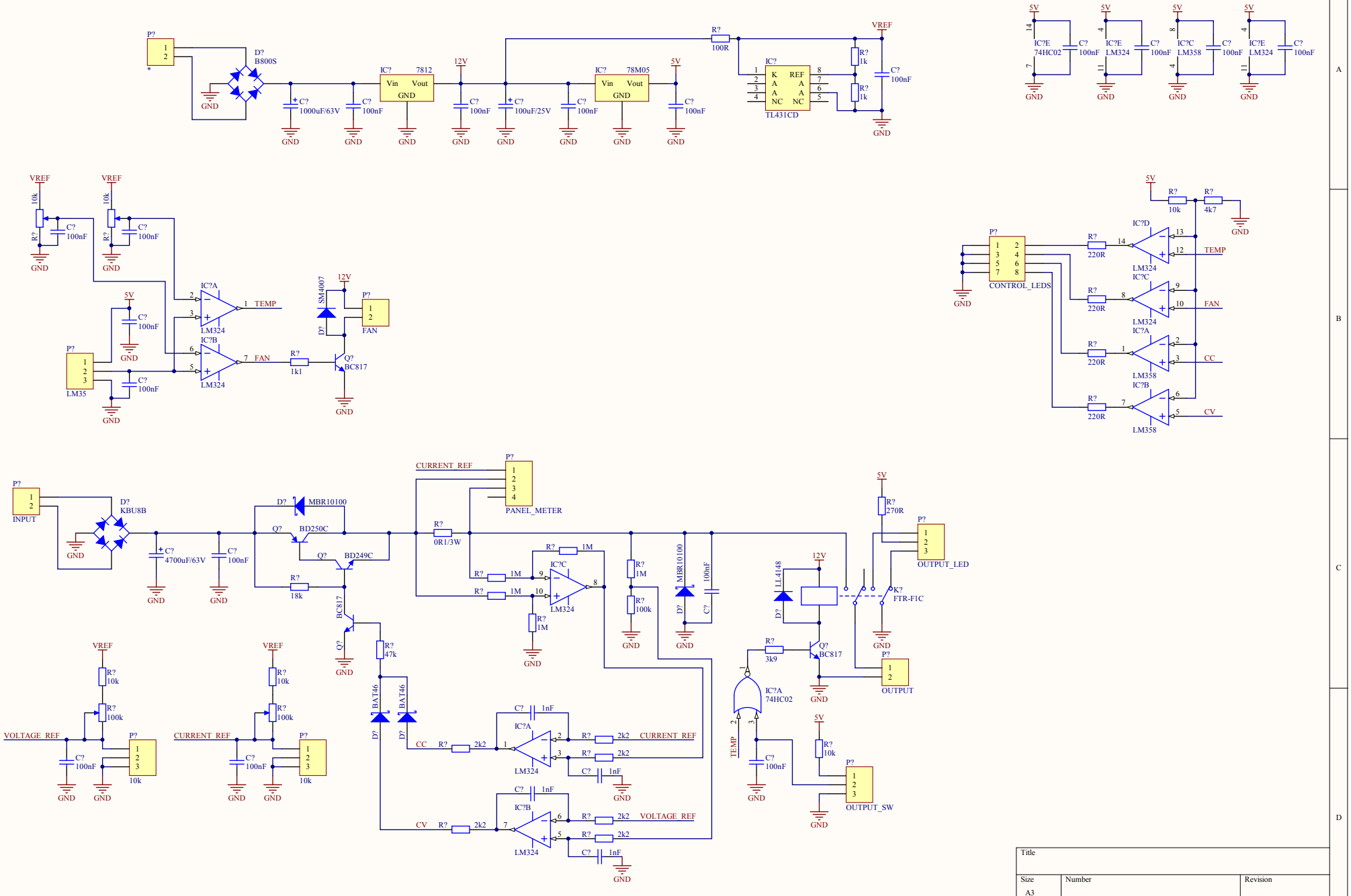

Title		
Size A3	Number	Revision
Date: 2010.12.08.	Sheet of	
File: D:\Projects\..\Laboratory Power Supply.SchDoc	Drawn By:	