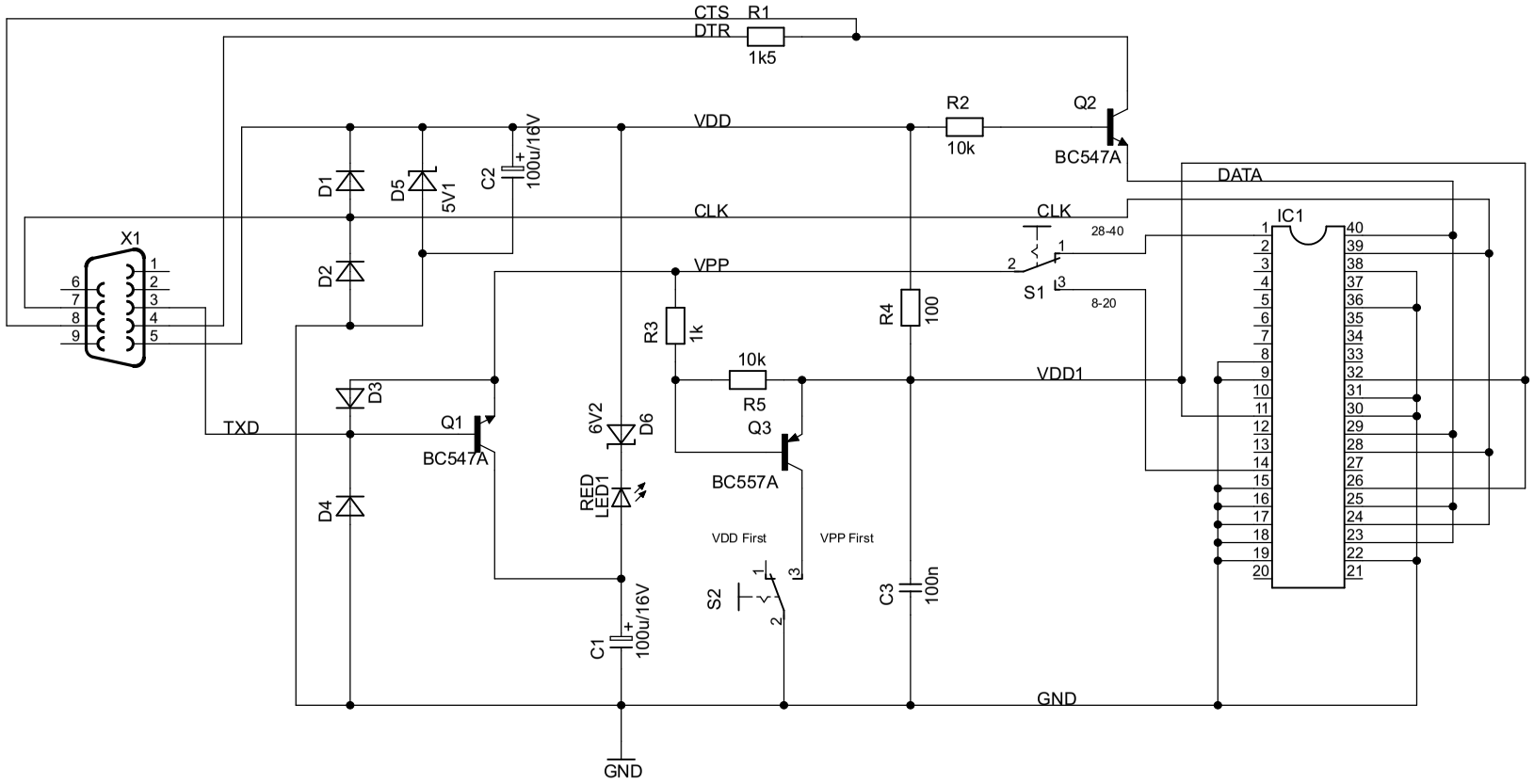

DV Electronics

TITLE: multipicd9

Document Number: Multipic Prommer

REV:

Date: 01/01/2007 10:07:34 p.m.

Sheet: 1/1