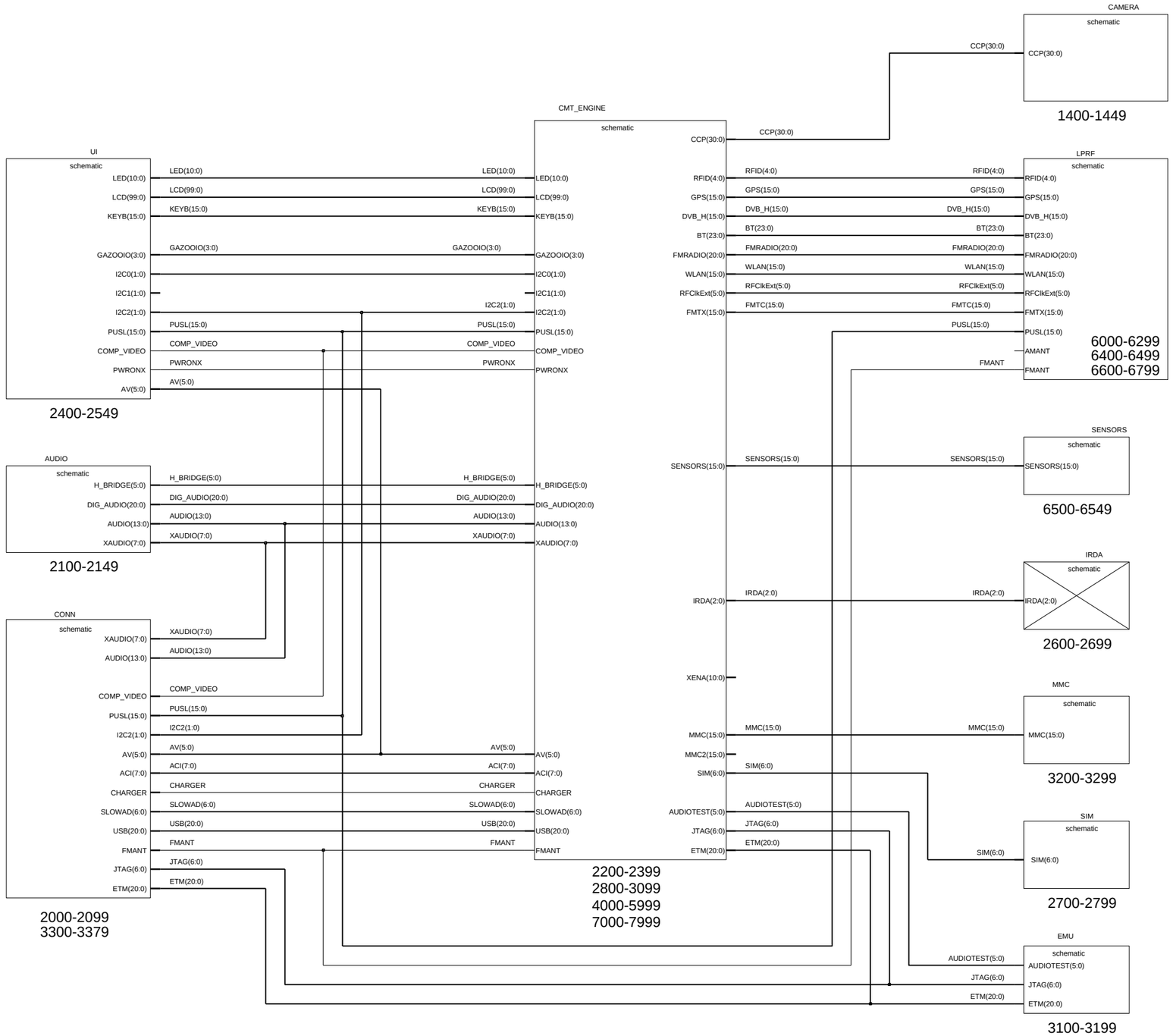

DC_CONN(2:1)

AV_CONN(6:1)

USB_CONN(6:1)

FLASH_CONN(2:1)

MAIN_CONN(60:1)

Based on bb_544/fbb71_rapuyamapop1.11m/m7_2008_wk40

Copyright (C) Nokia Corporation. All rights reserved.
THIS DRAWING IS PROTECTED BY COPYRIGHT AS AN UNPUBLISHED WORK.
UNAUTHORIZED REPRODUCTION OF THIS DRAWING IS NOT PERMITTED.
THIS DRAWING CONTAINS PROPRIETARY AND CONFIDENTIAL INFORMATION.
This document is property of Nokia Corporation

Name	Main PWB schematic	Appr	
Assoc	Main PWB	Des.	HOLBEKST 21-Mar-07
		Dr.	E0592687 23-Jun-10
File	/nokia/xsa_nmp/groups/hwsc1017/destiny/engine/3KTA_05	Sheet	1 of yy 0 (01)
Proj	Drw.	Print	Yes V. 1 Edit 38

CMT ENGINE

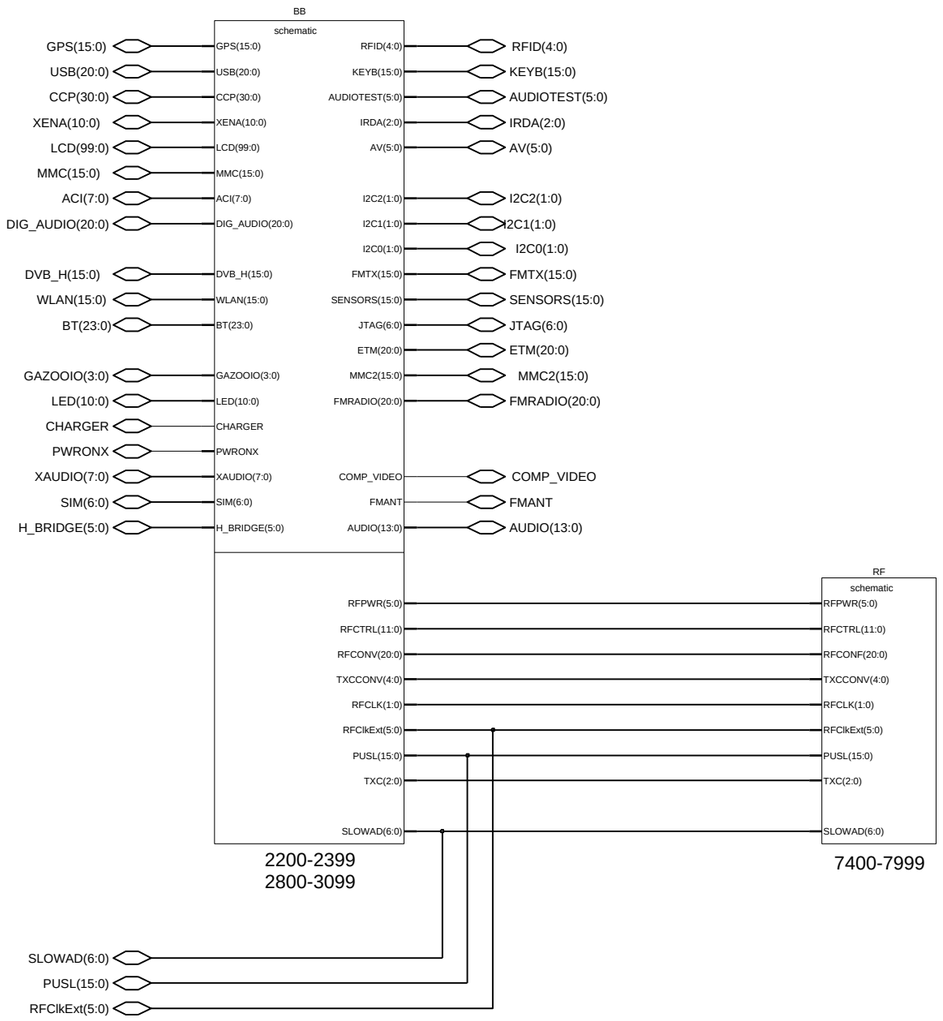

Copyright (C) Nokia Corporation. All rights reserved.
THIS DRAWING IS PROTECTED BY COPYRIGHT AS AN UNPUBLISHED WORK.
UNAUTHORIZED REPRODUCTION OF THIS DRAWING IS NOT PERMITTED.
THIS DRAWING CONTAINS PROPRIETARY AND CONFIDENTIAL INFORMATION.
This document is property of Nokia Corporation

Name	Engine	Appr	
Assoc	Main PWB	Des.	HOLBEKST 21-Mar-07
		Dr.	E0592687 23-Jun-10
File	/nokia/xsa_nmp/groups/hwsc1017/destiny/engine/3KTA_05/sch/cmt_engine	Sheet	2 of yy 0 (01)
Proj	Drw.	Print	Yes V. 1 Edit 22

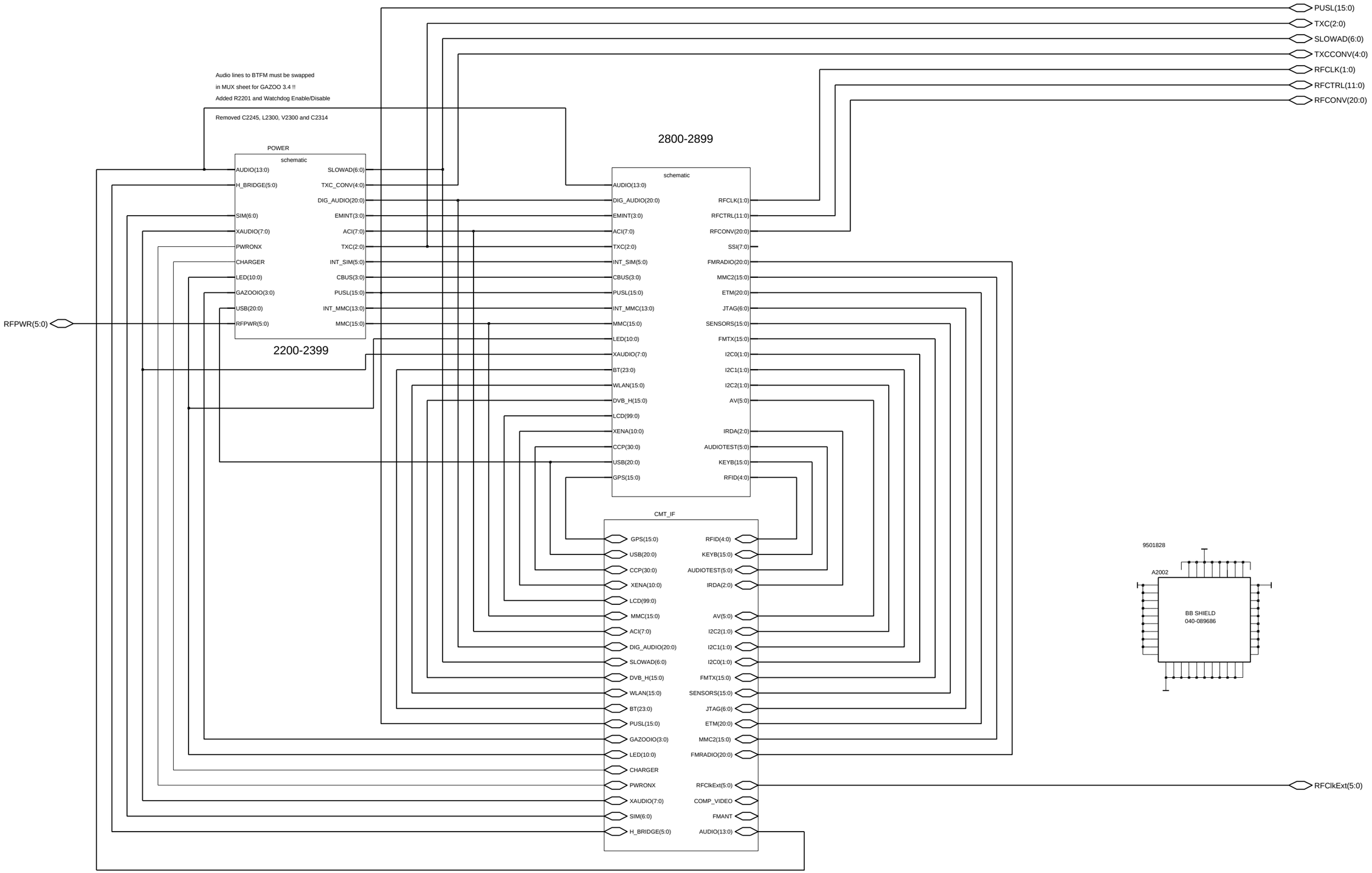

Copyright (C) Nokia Corporation. All rights reserved.
THIS DRAWING IS PROTECTED BY COPYRIGHT AS AN UNPUBLISHED WORK.
UNAUTHORIZED REPRODUCTION OF THIS DRAWING IS NOT PERMITTED.
THIS DRAWING CONTAINS PROPRIETARY AND CONFIDENTIAL INFORMATION.
This document is property of Nokia Corporation

Name	BB5.44x - BB TOP LEVEL	Appr	dd-mmm-yy
Assoc	Main PWB	Des. HOLBEKST	21-Mar-07
		Dr. E0592687	23-Jun-10
File	/nokia/xsa_nmp/groups/hwsc1017/destiny/engine/3KTA_05/sch/cmt_engine/bb	Sheet 3 of yy	0 (01)
Proj	Drw.	Print Yes V. 0.0	Edit 21

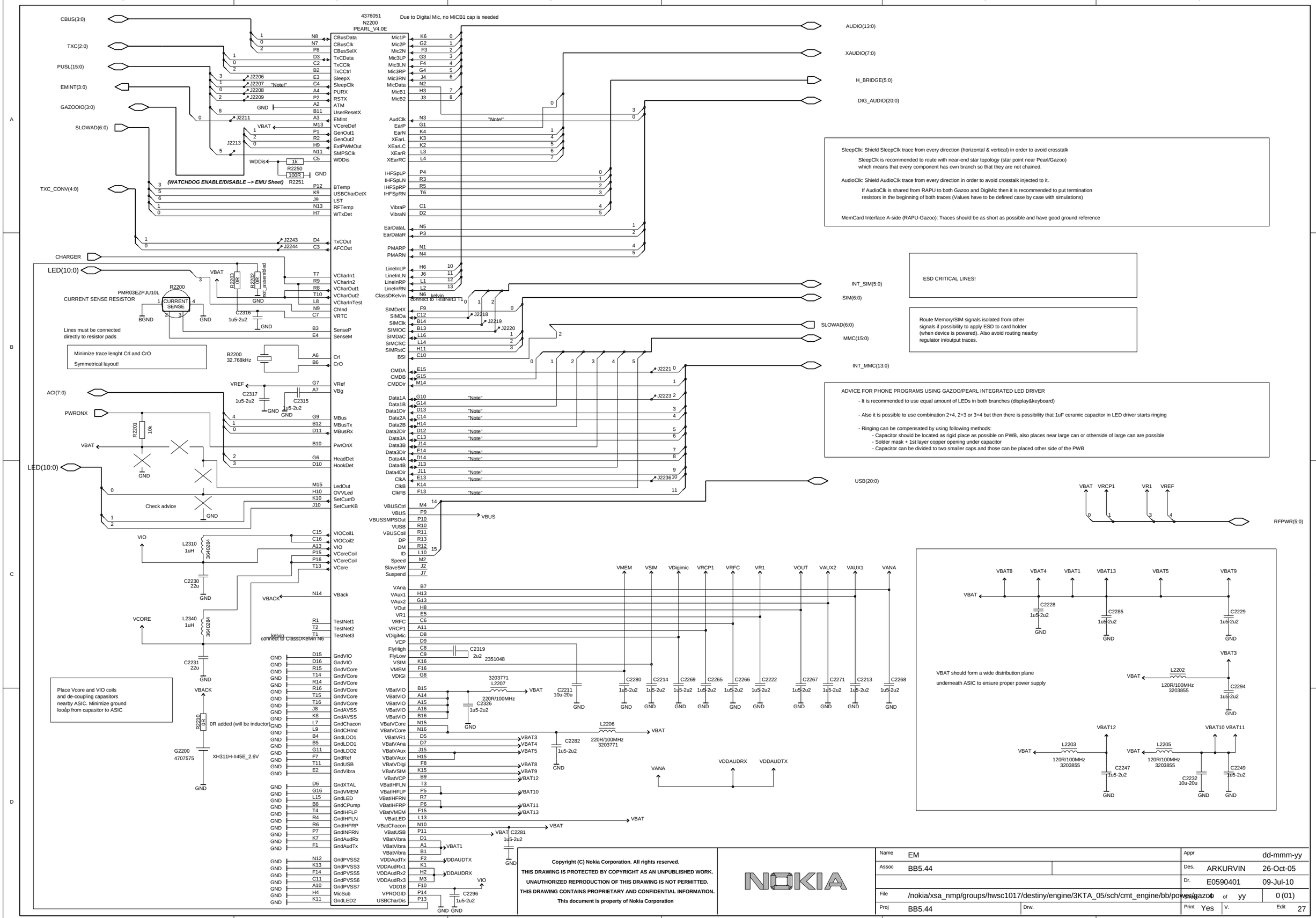

Copyright (C) Nokia Corporation. All rights reserved.
THIS DRAWING IS PROTECTED BY COPYRIGHT AS AN UNPUBLISHED WORK.
UNAUTHORIZED REPRODUCTION OF THIS DRAWING IS NOT PERMITTED.
THIS DRAWING CONTAINS PROPRIETARY AND CONFIDENTIAL INFORMATION.
This document is property of Nokia Corporation

Name	EM	Appr	dd-mmm-yy
Assoc	BB5.44	Des.	ARKURVIN 26-Oct-05
		Dr.	E0590401 09-Jul-10
File	/nokia/xsa_nmp/groups/hwsc1017/destiny/engine/3KTA_05/sch/cmt_engine/bb/power/gazoo	Sheet	0 of yy 0 (01)
Proj	BB5.44	Print	Yes V. Edit 27

Changed C2800-C2803, C2806, C2808-2814,2819-2821 to 2351075 (0201)

Added ref C2831-C2840, C2804-C2805

Added testpoint J2818

Removed testpoint J2803, J2806

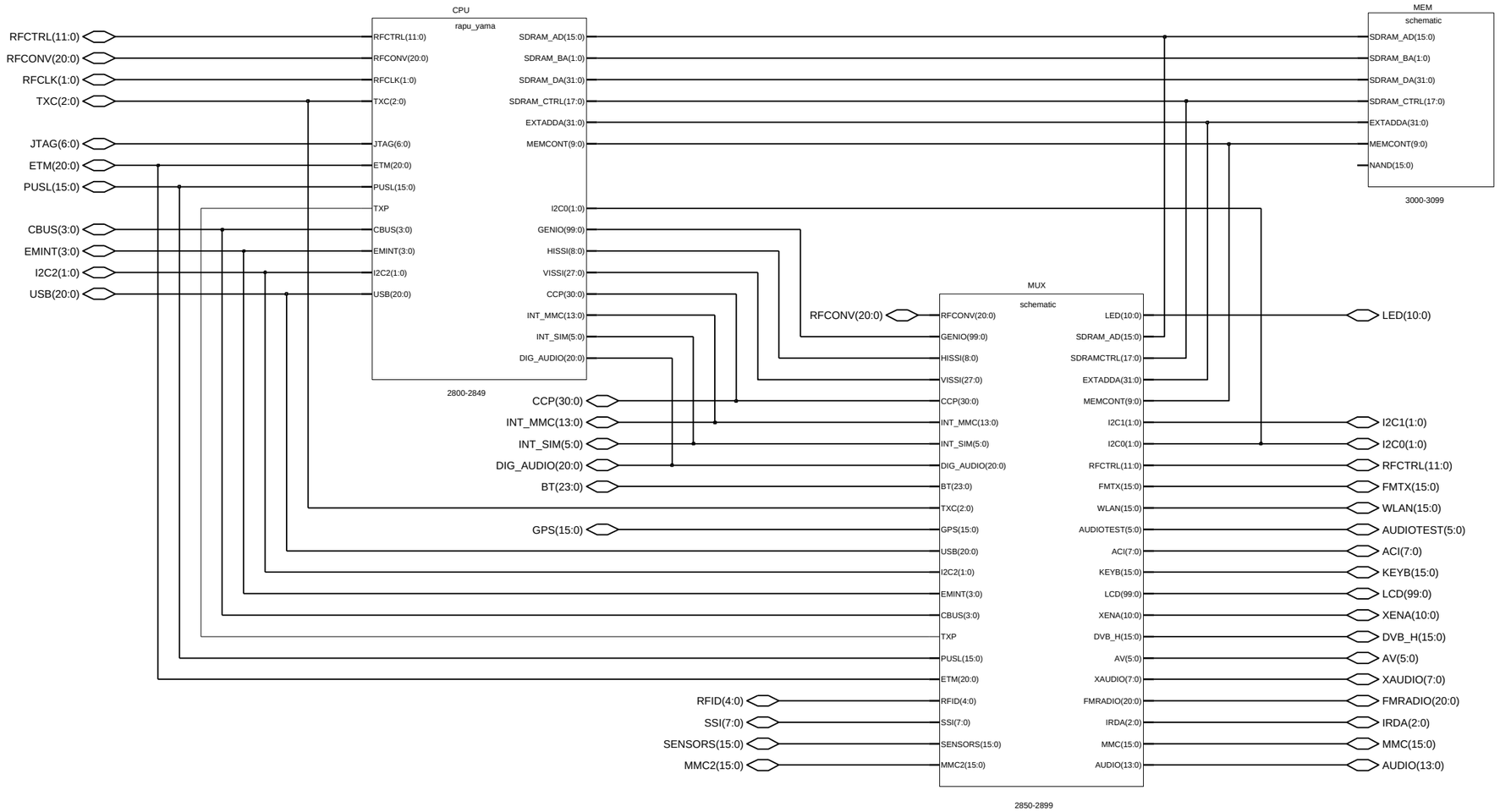

Copyright (C) Nokia Corporation. All rights reserved.
THIS DRAWING IS PROTECTED BY COPYRIGHT AS AN UNPUBLISHED WORK.
UNAUTHORIZED REPRODUCTION OF THIS DRAWING IS NOT PERMITTED.
THIS DRAWING CONTAINS PROPRIETARY AND CONFIDENTIAL INFORMATION.
This document is property of Nokia Corporation

Name	DIGI	Appr	dd-mmm-yy
Assoc		Des. ARKURVIN	13-May-06
		Dr. E0592687	23-Jun-10
File	/nokia/xsa_nmp/groups/hwsc1017/destiny/engine/3KTA_05/sch/cmt_engine/bb/digi	Sheet 5 of yy	0 (01)
Proj BB5.44	Drw.	Print Yes V. 0.0	Edit 19

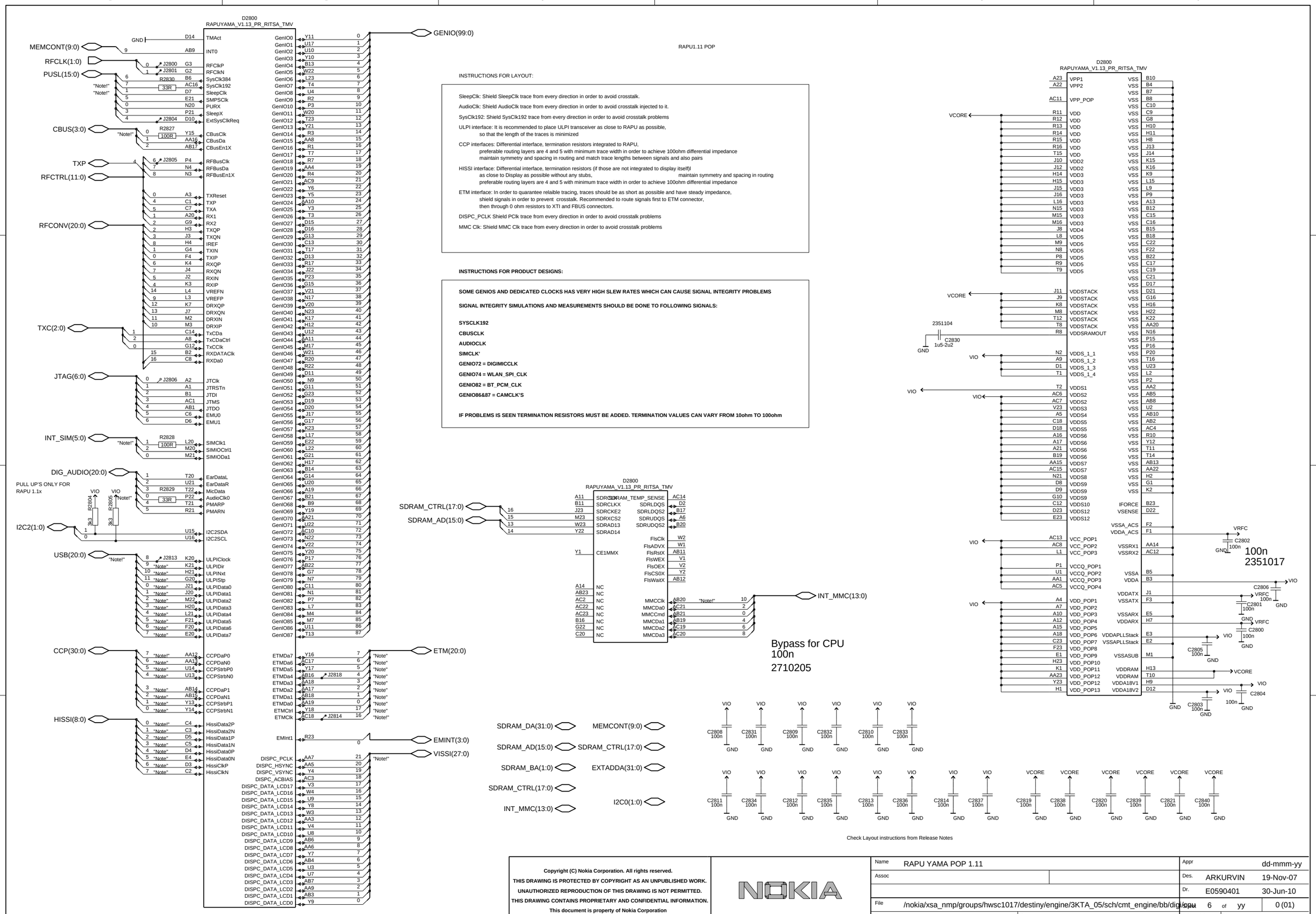

Copyright (C) Nokia Corporation. All rights reserved.
THIS DRAWING IS PROTECTED BY COPYRIGHT AS AN UNPUBLISHED WORK.
UNAUTHORIZED REPRODUCTION OF THIS DRAWING IS NOT PERMITTED.
THIS DRAWING CONTAINS PROPRIETARY AND CONFIDENTIAL INFORMATION.
This document is property of Nokia Corporation

Name	RAPU YAMA POP 1.11	Appr	dd-mmm-yy
Assoc		Des. ARKURVIN	19-Nov-07
		Dr. E0590401	30-Jun-10
File	/nokia/xsa_nmp/groups/hwsc1017/destiny/engine/3KTA_05/sch/cmt_engine/bb/digi/rapu	Sheet 6 of yy	0 (01)
Proj BB5.44	Drw.	Print Yes V. 0.0	Edit 28

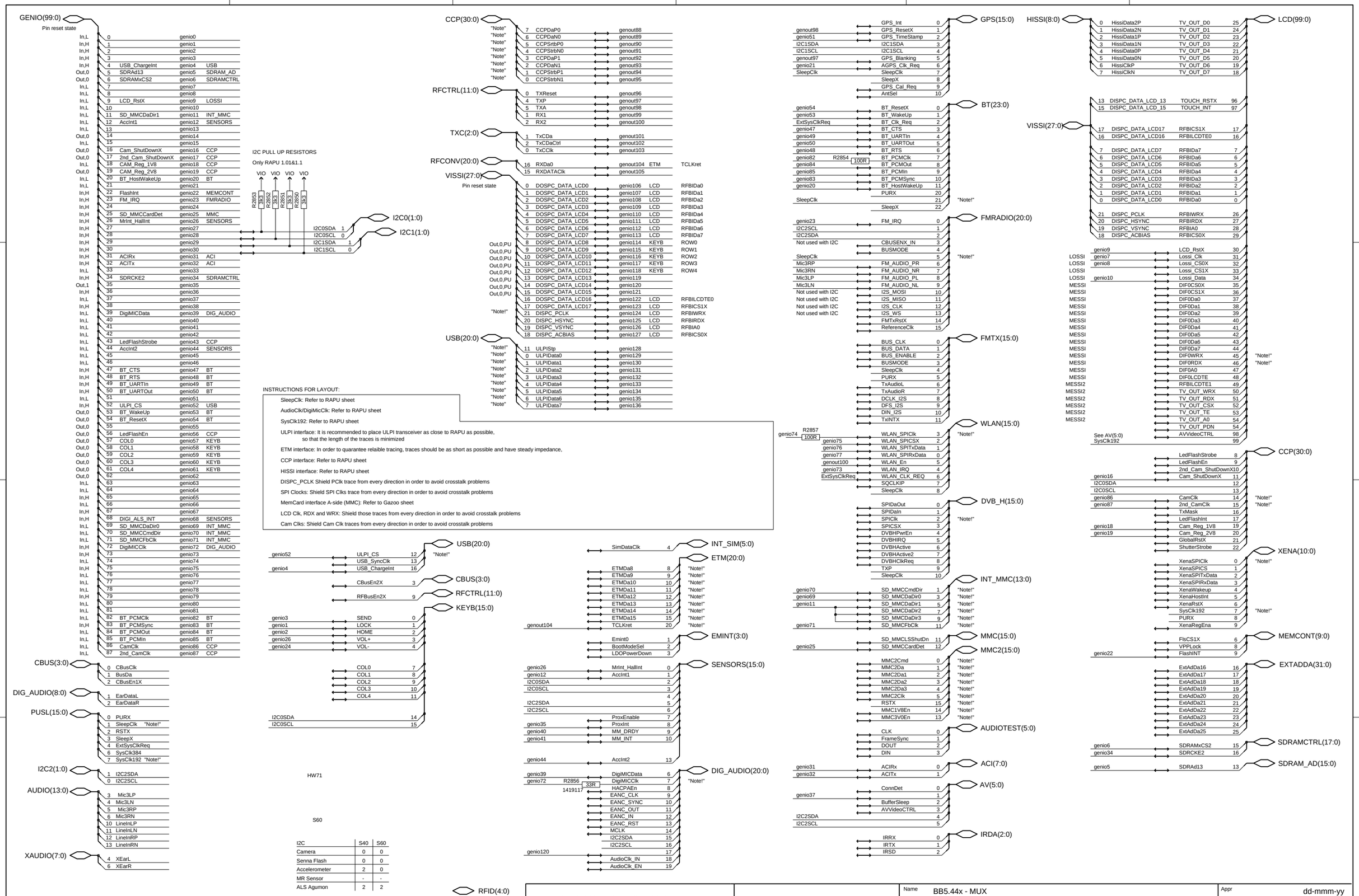

INSTRUCTIONS FOR LAYOUT:

SleepClk: Refer to RAPU sheet

AudioClk/DigiMicClk: Refer to RAPU sheet

SysClk192: Refer to RAPU sheet

ULPI interface: It is recommended to place ULPI transceiver as close to RAPU as possible, so that the length of the traces is minimized

ETM interface: In order to quarantee relaible tracing, traces should be as short as possible and have steady impedance,

CCP interface: Refer to RAPU sheet

HISSI interface: Refer to RAPU sheet

DISPC_PCLK Shield PClk trace from every direction in order to avoid crosstalk problems

SPI Clocks: Shield SPI Clks trace from every direction in order to avoid crosstalk problems

MemCard interface A-side (MMC): Refer to Gazoo sheet

LCD Clk, RDX and WRX: Shield those traces from every direction in order to avoid crosstalk problems

Cam Clks: Shield Cam Clk traces from every direction in order to avoid crosstalk problems

I2C	S40	S60
Camera	0	0
Senna Flash	0	0
Accelerometer	2	0
MR Sensor	-	-
ALS Agumon	2	2

Copyright (C) Nokia Corporation. All rights reserved.
THIS DRAWING IS PROTECTED BY COPYRIGHT AS AN UNPUBLISHED WORK.
UNAUTHORIZED REPRODUCTION OF THIS DRAWING IS NOT PERMITTED.
THIS DRAWING CONTAINS PROPRIETARY AND CONFIDENTIAL INFORMATION.
This document is property of Nokia Corporation

Name	BB5.44x - MUX	Appr	dd-mmm-yy
Assoc	Main PWB	Des.	HOLBEKST 19-Jun-08
		Dr.	E0592687 23-Jun-10
File	/nokia/xsa_nmp/groups/hwsc1017/destiny/engine/3KTA_05/sch/cmt_engine/bb/digi/mux	Sheet	7 of yy 0 (01)
Proj	BB5.44	Print	Yes V. 0.0 Edit 35

D3000
K5W2G1GACP-AL60

A1 COMBO 32Mx32 DDR
128Mx16 M3

43471C0|NONET

43470D7 (or 43470S2) Samsung to be used only for first Build

43471C0 Samsung to be used for B2 onwards and for MRE BOM

4347xxx Toshiba to be qualified also for RU

NAND(15:0)
SDRAM_AD(15:0) — SDRAM_AD(15:0)
SDRAM_CTRL(17:0) — SDRAM_CTRL(17:0)
SDRAM_DA(31:0) — SDRAM_DA(31:0)
SDRAM_BA(1:0) — SDRAM_BA(1:0)
MEMCONT(9:0) — MEMCONT(9:0)
EXTADDA(31:0) — EXTADDA(31:0)
NAND(15:0) — NAND(15:0)

Copyright (C) Nokia Corporation. All rights reserved.
THIS DRAWING IS PROTECTED BY COPYRIGHT AS AN UNPUBLISHED WORK.
UNAUTHORIZED REPRODUCTION OF THIS DRAWING IS NOT PERMITTED.
THIS DRAWING CONTAINS PROPRIETARY AND CONFIDENTIAL INFORMATION.
This document is property of Nokia Corporation

Name	MEMORY 1Gb NAND+512 DDR POP4	Appr	dd-mmm-yy
Assoc		Des.	ARKURVIN 12-Jun-07
		Dr.	E0592687 23-Jun-10
File	/nokia/xsa_nmp/groups/hwsc1017/destiny/engine/3KTA_05/sch/cmt_engine/bb/dig/mem	Sheet	8 of yy 0 (01)
Proj	BB5.44 Drw.	Print	Yes V. 0.0 Edit 19

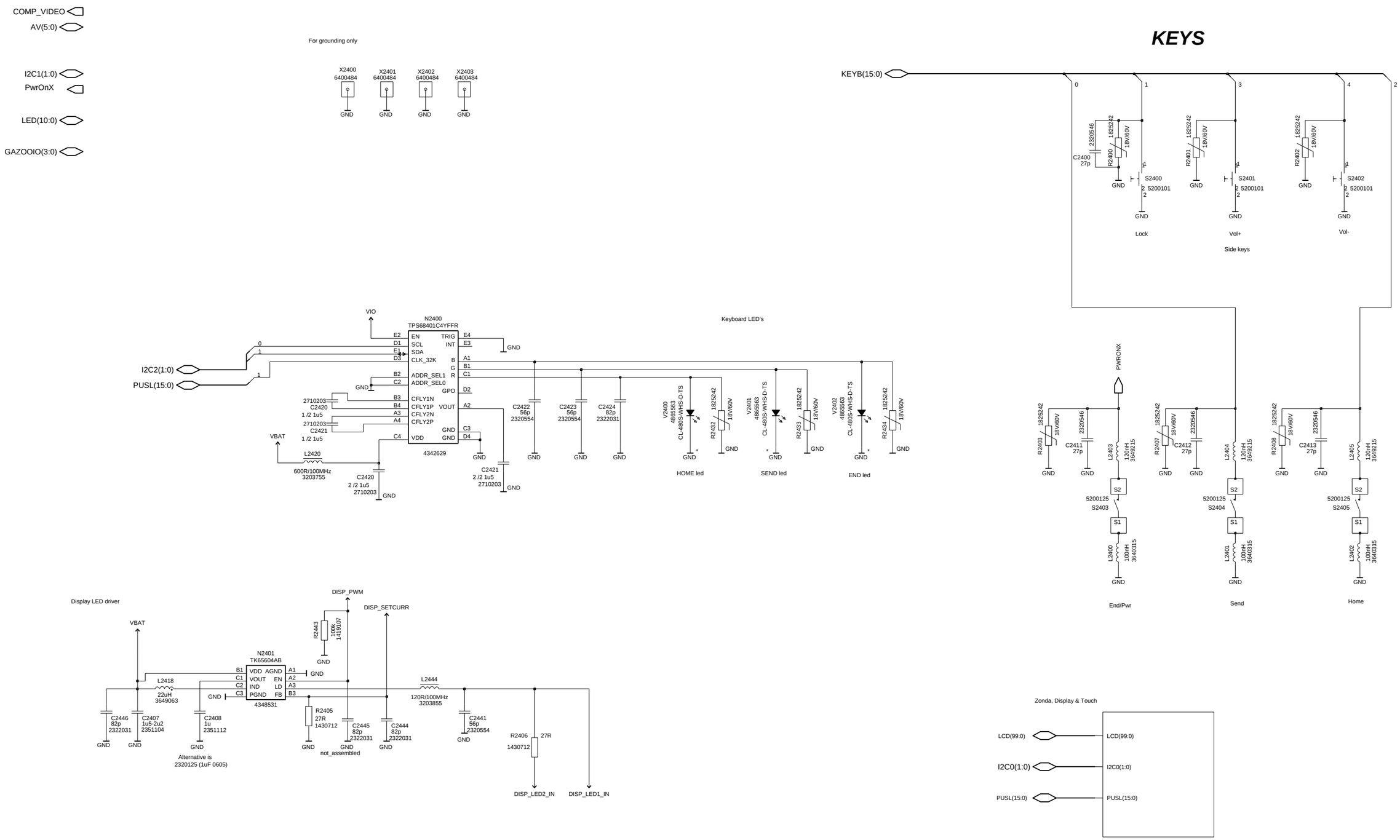

Copyright (C) Nokia Corporation. All rights reserved.
THIS DRAWING IS PROTECTED BY COPYRIGHT AS AN UNPUBLISHED WORK.
UNAUTHORIZED REPRODUCTION OF THIS DRAWING IS NOT PERMITTED.
THIS DRAWING CONTAINS PROPRIETARY AND CONFIDENTIAL INFORMATION.
This document is property of Nokia Corporation

Name	UI	Appr	dd-mmm-yy
Assoc	Main PWB	Des. HOLBEKST	21-Mar-07
		Dr. E0685731	20-Jul-10
File	/nokia/xsa_nmp/groups/hwsc1017/destiny/engine/3KTA_06/sch/ui	Sheet 9 of yy	0 (01)
Proj	Drw.	Print Yes V. 1	Edit 68

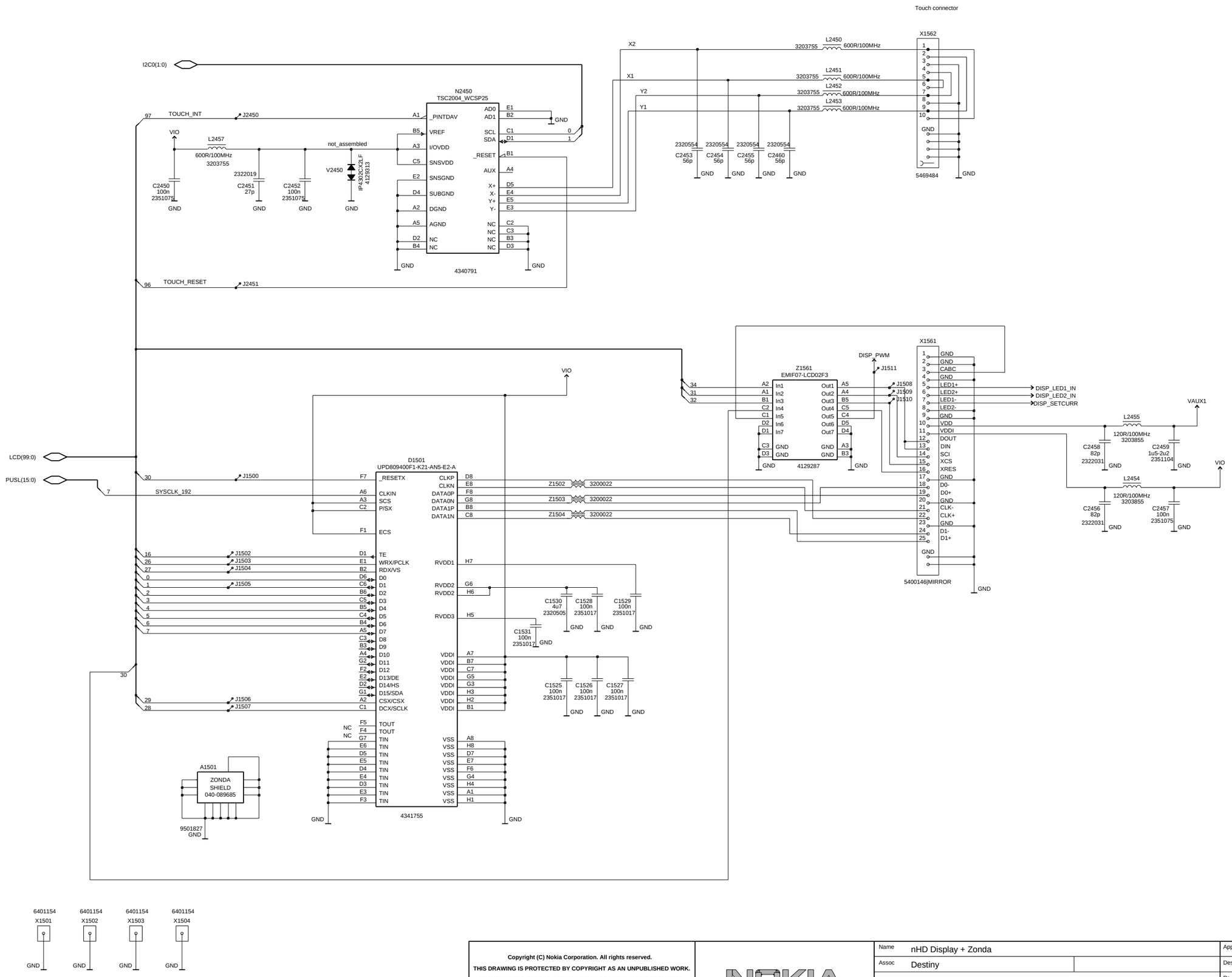

Copyright (C) Nokia Corporation. All rights reserved.
THIS DRAWING IS PROTECTED BY COPYRIGHT AS AN UNPUBLISHED WORK.
UNAUTHORIZED REPRODUCTION OF THIS DRAWING IS NOT PERMITTED.
THIS DRAWING CONTAINS PROPRIETARY AND CONFIDENTIAL INFORMATION.
This document is property of Nokia Corporation

Name	nHD Display + Zonda	Appr	dd-mmm-yy
Assoc	Destiny	Des. MMe	21-Jan-10
		Dr. E0590401	01-Jul-10
File	/nokia/xsa_nmp/groups/hwsc1017/destiny/engine/3KTA_05/sch/display	Sheet 10 of yy	0 (01)
Proj	Destiny	Drw.	Print Yes V. 0.0 Edit 61

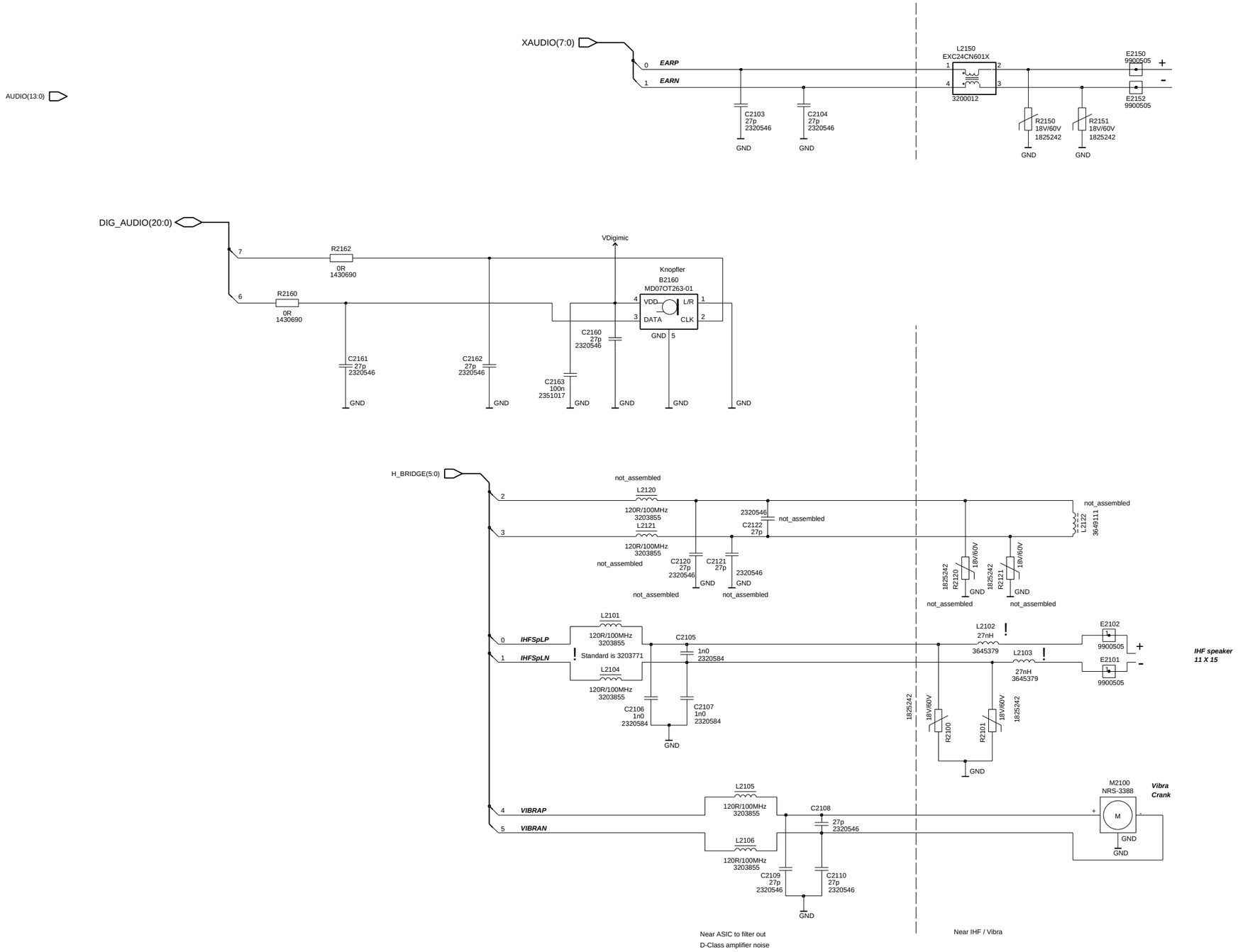

! = Project specific

Copyright (C) Nokia Corporation. All rights reserved.
THIS DRAWING IS PROTECTED BY COPYRIGHT AS AN UNPUBLISHED WORK.
UNAUTHORIZED REPRODUCTION OF THIS DRAWING IS NOT PERMITTED.
THIS DRAWING CONTAINS PROPRIETARY AND CONFIDENTIAL INFORMATION.
This document is property of Nokia Corporation

Name	Audio	Appr	dd-mmm-yy
Assoc	Main PWB	Des. HOLBEKST	21-Mar-07
		Dr. E0590401	09-Jul-10
File	/nokia/xsa_nmp/groups/hwsc1017/destiny/engine/3KTA_05/sch/audio	Sheet 11 of yy	1 (01)
Proj	Drw.	Print Yes V. 1	Edit 50

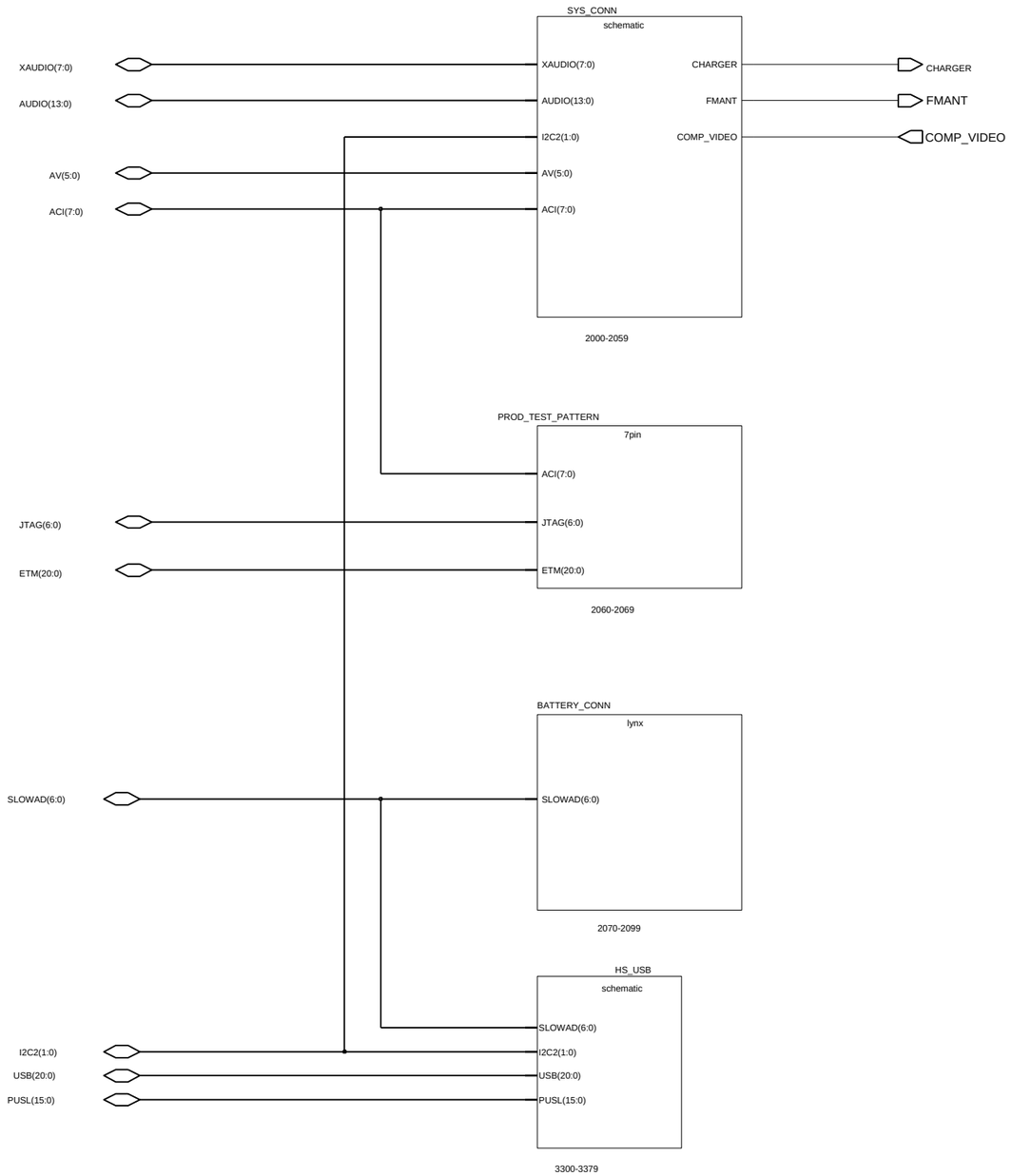

Copyright (C) Nokia Corporation. All rights reserved.
THIS DRAWING IS PROTECTED BY COPYRIGHT AS AN UNPUBLISHED WORK.
UNAUTHORIZED REPRODUCTION OF THIS DRAWING IS NOT PERMITTED.
THIS DRAWING CONTAINS PROPRIETARY AND CONFIDENTIAL INFORMATION.
This document is property of Nokia Corporation

Name	System and battery connector	Appr	10-Aug-00
Assoc	BB5.44x	Des. ARKURVIN	18-Jan-02
		Dr. E0592687	23-Jun-10
File	/nokia/xsa_nmp/groups/hwsc1017/destiny/engine/3KTA_05/sch/conn	Sheet 12 of yy	1 (01)
Proj BB5.44x	Drw.	Print Yes V.	Edit 22

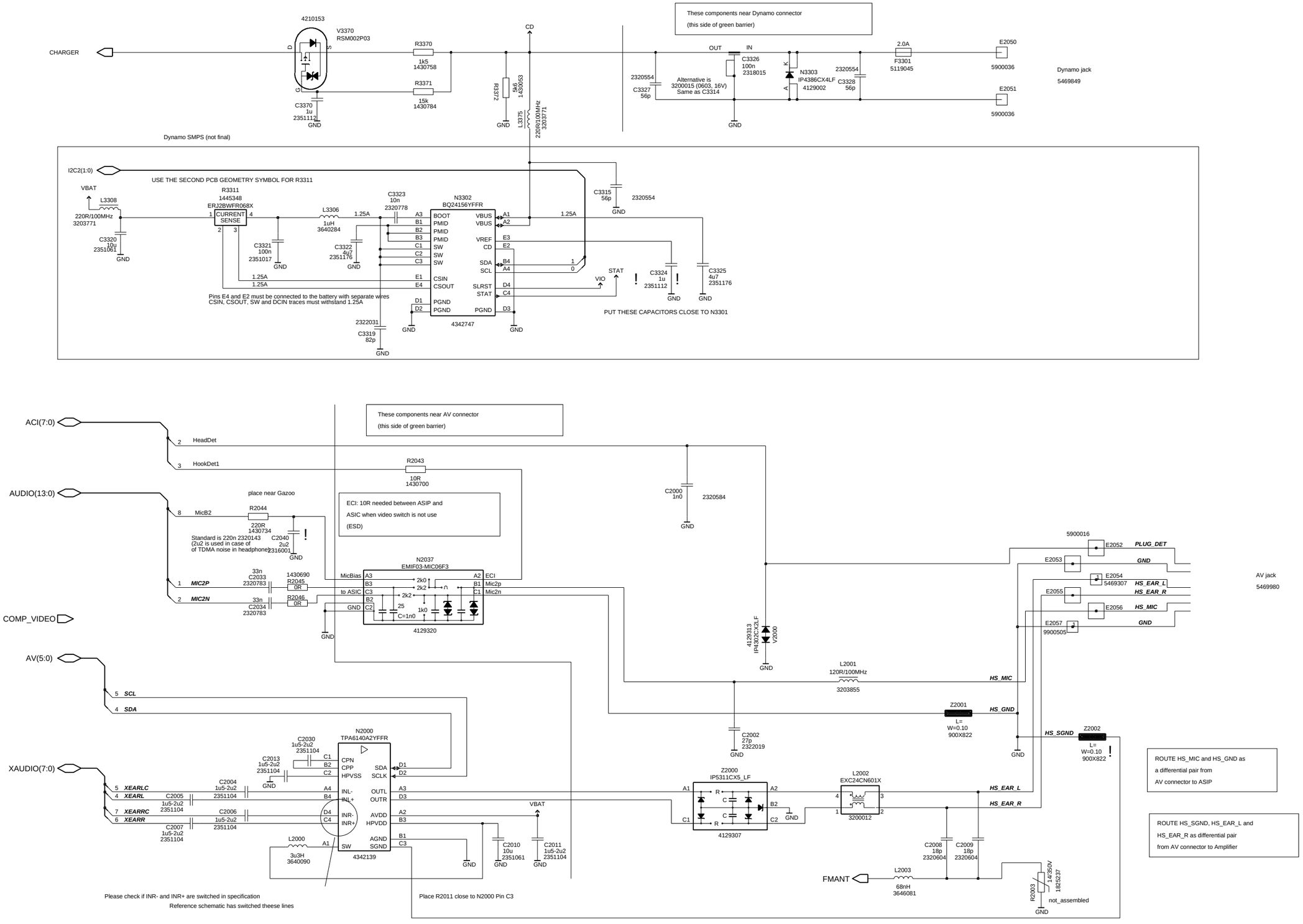

! = Project specific

Copyright (C) Nokia Corporation. All rights reserved.
THIS DRAWING IS PROTECTED BY COPYRIGHT AS AN UNPUBLISHED WORK.
UNAUTHORIZED REPRODUCTION OF THIS DRAWING IS NOT PERMITTED.
THIS DRAWING CONTAINS PROPRIETARY AND CONFIDENTIAL INFORMATION.
This document is property of Nokia Corporation

Name	AV connector	Appr	dd-mmm-yy
Assoc	Main PWB	Des. HOLBEKST	21-Mar-07
		Dr. E0590401	30-Jun-10
File	/nokia/xsa_nmp/groups/hwsc1017/destiny/engine/3KTA_05/sch/sys_conn	Sheet 13 of yy	0 (01)
Proj	Drw.	Print Yes V. 1	Edit 61

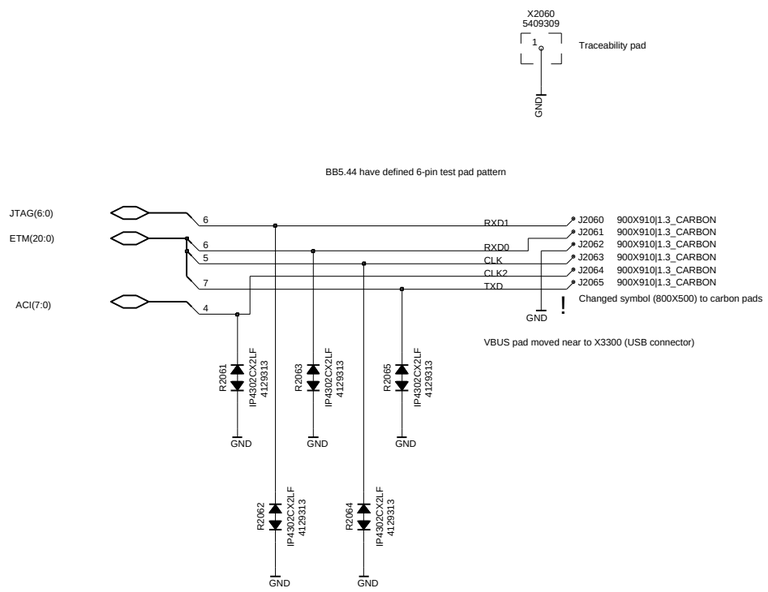

! = Project specific

Copyright (C) Nokia Corporation. All rights reserved.
THIS DRAWING IS PROTECTED BY COPYRIGHT AS AN UNPUBLISHED WORK.
UNAUTHORIZED REPRODUCTION OF THIS DRAWING IS NOT PERMITTED.
THIS DRAWING CONTAINS PROPRIETARY AND CONFIDENTIAL INFORMATION.
This document is property of Nokia Corporation

Name	Production test pad	Appr	10-Aug-00
Assoc	Main PWB	Des. HOLBEKST	21-Mar-07
		Dr. E0592687	23-Jun-10
File	/nokia/xsa_nmp/groups/hwsc1017/destiny/engine/3KTA_05/sch/prod_test_pattern	Sheet 14 of yy	1 (01)
Proj	Drw.	Print Yes V. 1	Edit 22

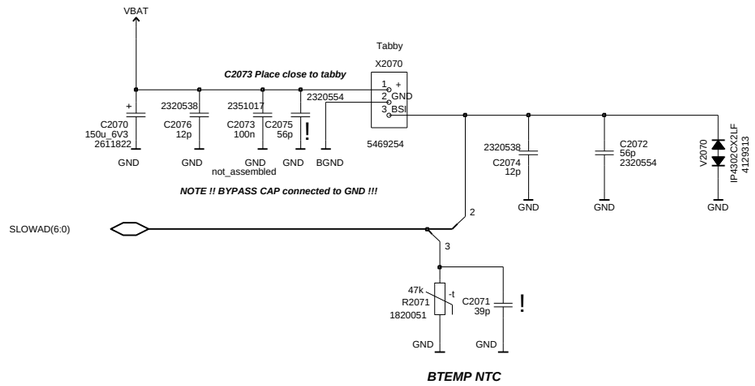

! = Project specific

Copyright (C) Nokia Corporation. All rights reserved.
THIS DRAWING IS PROTECTED BY COPYRIGHT AS AN UNPUBLISHED WORK.
UNAUTHORIZED REPRODUCTION OF THIS DRAWING IS NOT PERMITTED.
THIS DRAWING CONTAINS PROPRIETARY AND CONFIDENTIAL INFORMATION.
This document is property of Nokia Corporation

Name	Battery Connector	Appr	10-Aug-00
Assoc	Main PWB	Des. HOLBEKST	21-Mar-07
		Dr. E0590401	09-Jul-10
File	/nokia/xsa_nmp/groups/hwsc1017/destiny/engine/3KTA_05/sch/battery_conn	Sheet 15 of yy	1 (01)
Proj	Drw.	Print Yes V. 1	Edit

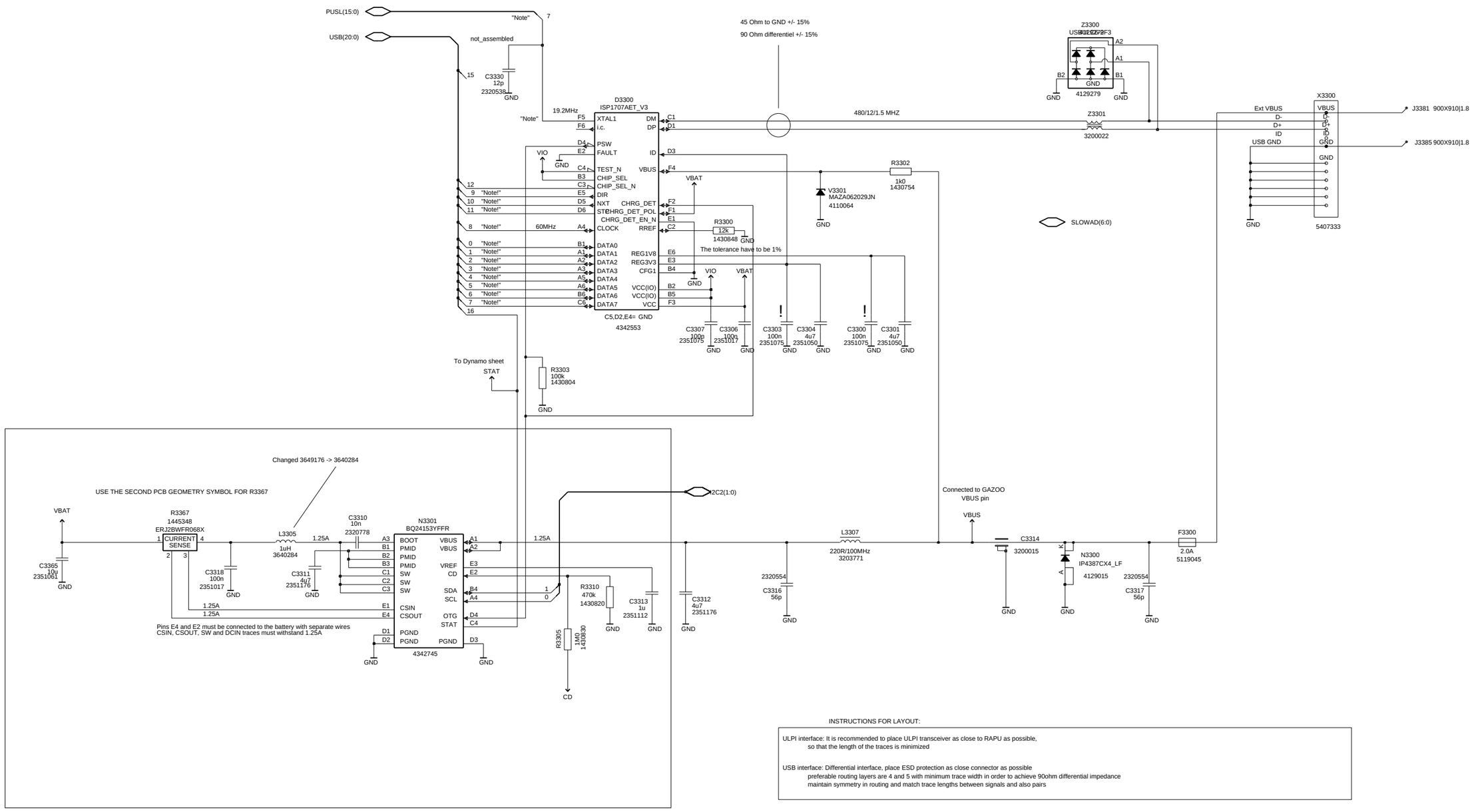

INSTRUCTIONS FOR LAYOUT:

ULPI interface: It is recommended to place ULPI transceiver as close to RAPU as possible,
so that the length of the traces is minimized

USB interface: Differential interface, place ESD protection as close connector as possible
preferable routing layers are 4 and 5 with minimum trace width in order to achieve 90ohm differential impedance
maintain symmetry in routing and match trace lengths between signals and also pairs

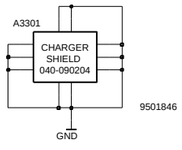

! = Project specific

Copyright (C) Nokia Corporation. All rights reserved.
THIS DRAWING IS PROTECTED BY COPYRIGHT AS AN UNPUBLISHED WORK.
UNAUTHORIZED REPRODUCTION OF THIS DRAWING IS NOT PERMITTED.
THIS DRAWING CONTAINS PROPRIETARY AND CONFIDENTIAL INFORMATION.
This document is property of Nokia Corporation

Name	HS USB	Appr	dd-mmm-yy
Assoc	Main PWB	Des. HOLBEKST	21-Mar-07
		Dr. E0590401	01-Jul-10
File	/nokia/xsa_nmp/groups/hwsc1017/destiny/engine/3KTA_05/sch/hs_usb	Sheet 16 of yy	0 (01)
Proj	Drw.	Print Yes V. 1	Edit 44

5 MPIX SMIA65 CAMERA

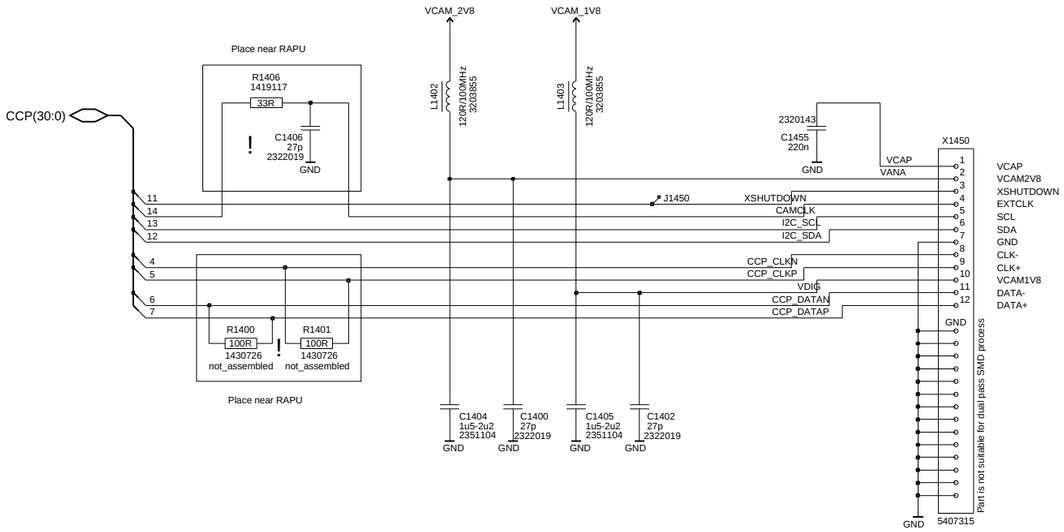

INSTRUCTIONS FOR LAYOUT:

CCP interfaces: Differential interface, termination resistors as close to RAPU as possible without any stubs,
preferable routing layers are 4 and 5 with minimum trace width in order to achieve 100ohm differential impedance
maintain symmetry in routing and match trace lengths between signals and also pairs

Cam Clks: Shield Cam Clk traces from every direction in order to avoid crosstalk problems

CAMERA POWER SUPPLIES

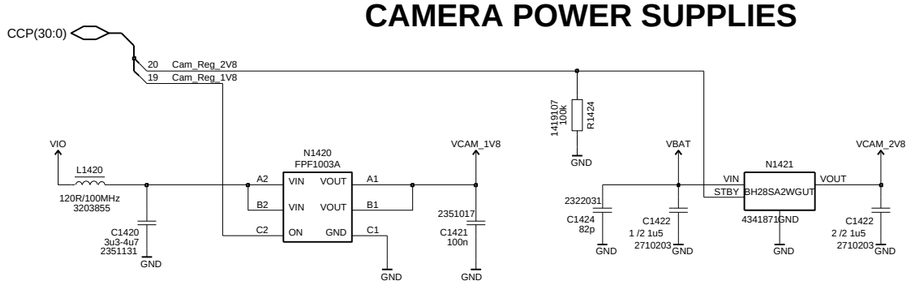

! = Project specific

Copyright (C) Nokia Corporation. All rights reserved.
THIS DRAWING IS PROTECTED BY COPYRIGHT AS AN UNPUBLISHED WORK.
UNAUTHORIZED REPRODUCTION OF THIS DRAWING IS NOT PERMITTED.
THIS DRAWING CONTAINS PROPRIETARY AND CONFIDENTIAL INFORMATION.
This document is property of Nokia Corporation

Name	Camera	Appr	dd-mmm-yy
Assoc	Main PWB	Des. HOLBEKST	21-Mar-07
		Dr. E0590401	30-Jun-10
File	/nokia/xsa_nmp/groups/hwsc1017/destiny/engine/3KTA_05/sch/camera	Sheet 17 of yy	0 (01)
Proj	Drw.	Print Yes V. 1	Edit 50

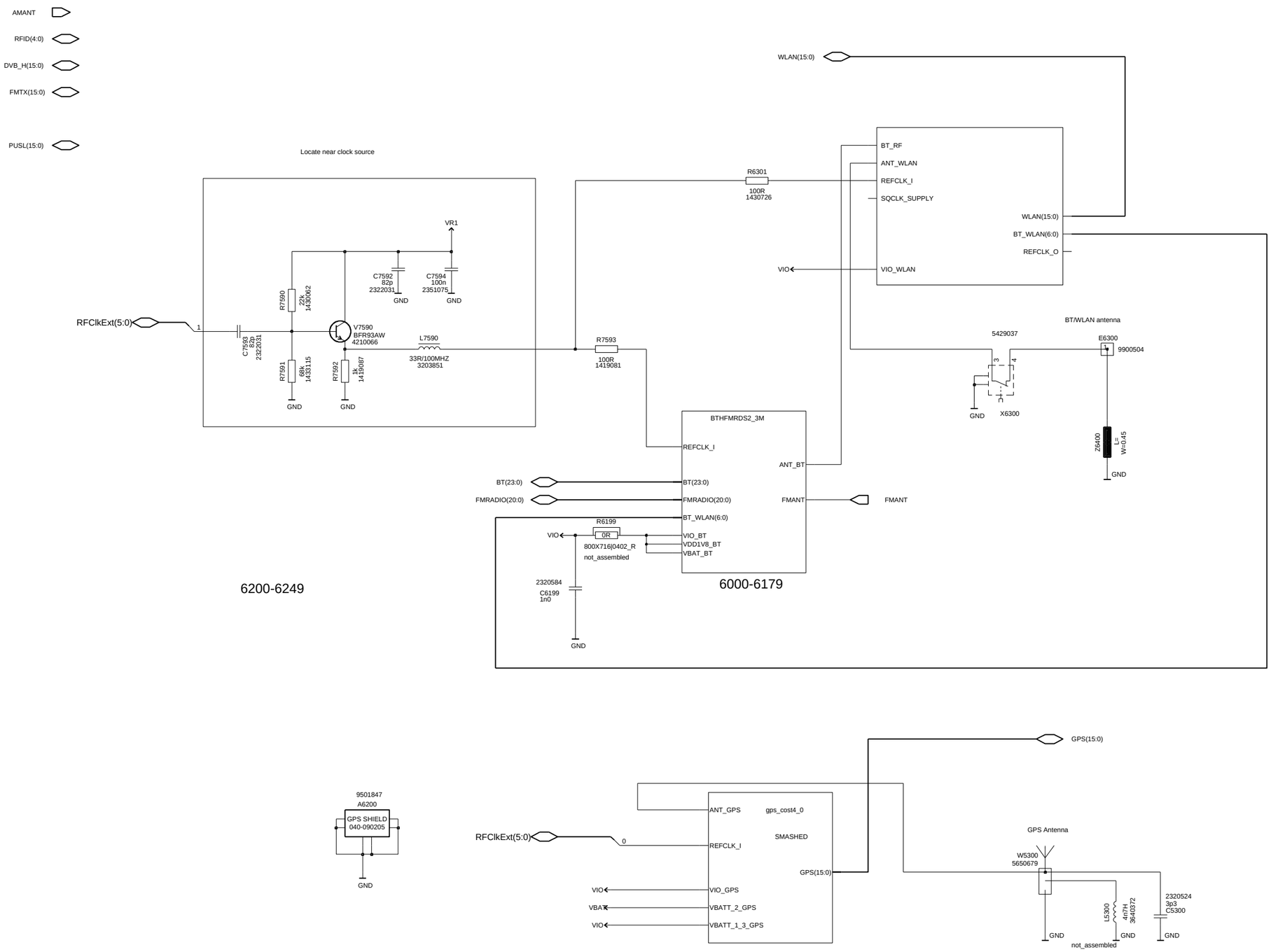

Copyright (C) Nokia Corporation. All rights reserved.
THIS DRAWING IS PROTECTED BY COPYRIGHT AS AN UNPUBLISHED WORK.
UNAUTHORIZED REPRODUCTION OF THIS DRAWING IS NOT PERMITTED.
THIS DRAWING CONTAINS PROPRIETARY AND CONFIDENTIAL INFORMATION.
This document is property of Nokia Corporation

Name	LPRF	Appr	dd-mmm-yy
Assoc	Main PWB	Des. HOLBEKST	21-Mar-07
		Dr. E0590401	09-Jul-10
File	/nokia/xsa_nmp/groups/hwsc1017/destiny/engine/3KTA_05/sch/lprf	Sheet 18 of yy	0 (01)
Proj	Drw.	Print Yes V. 0.0	Edit 76

BTHFMRDS_2.3M

BLUETOOTH & FM RADIO MODULE WITHOUT RF FILTER

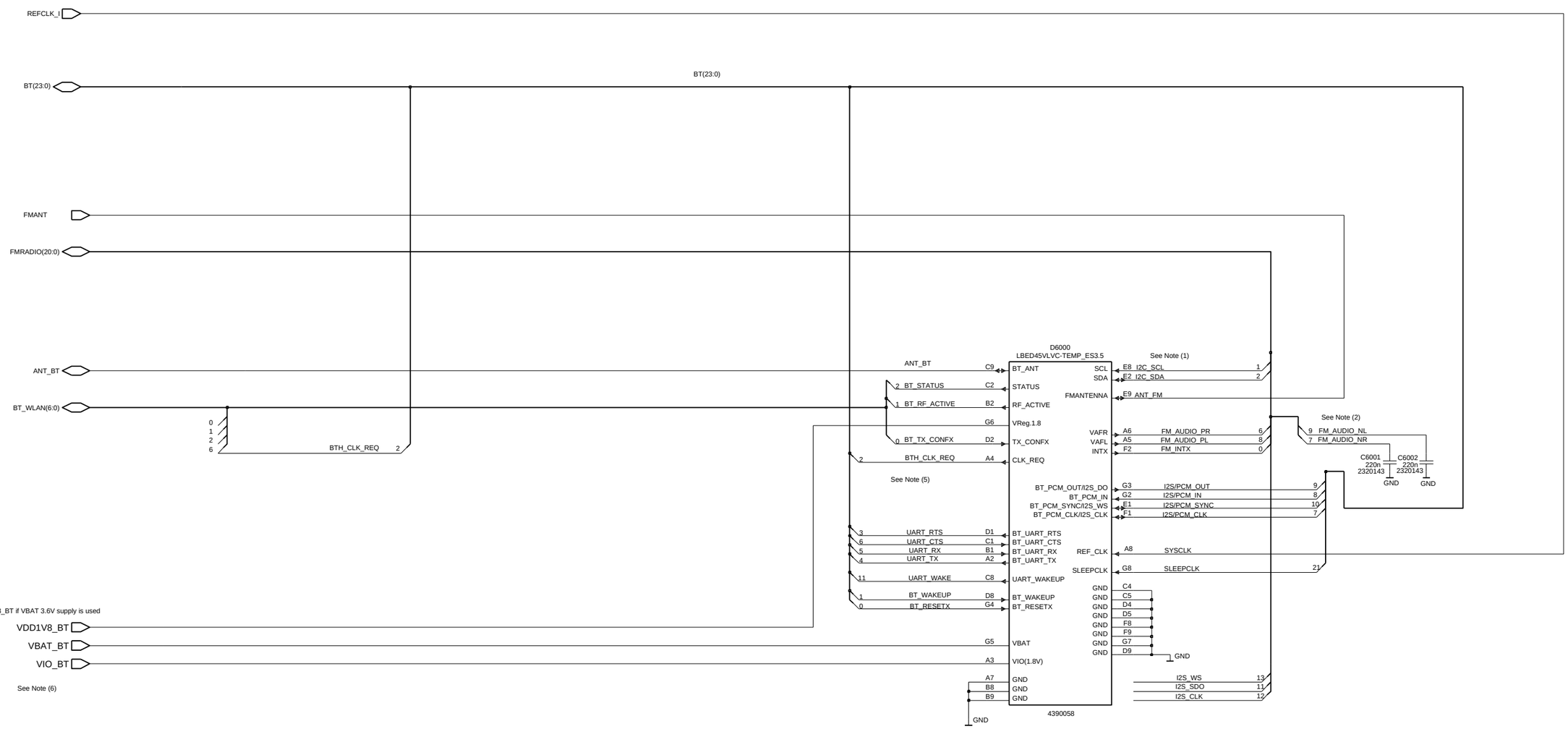

Notes

(1) 3k3 Pull-up Resistors are required on I2C_SCL, I2C_SDA.

(2) C6001 and C6002 should be placed in the Bluetooth area, so that the differential audio lines to Retu ASIC are equal length.

(3) D6000 BTHFMRDS2.2M_WLAN module includes an internal dc blocking capacitor between BT_ANT (pin 15) and ASIC BT_ANT RF terminal.

(4) Additional components for phone wing boards are given in BTHFMRDS2.1_TEST release

(5) Pull-down is required on BTH_CLK_REQ signal (see release note)

(6) For 3.6V supply voltage connect VBAT_BT input to VBAT 3.6V supply, VDD1V8_BT input must be Not Connected

For 1.8V supply voltage connect VDD1V8_BT and VBAT_BT inputs to 1.8V supply

Copyright (C) Nokia Corporation. All rights reserved.
THIS DRAWING IS PROTECTED BY COPYRIGHT AS AN UNPUBLISHED WORK.
UNAUTHORIZED REPRODUCTION OF THIS DRAWING IS NOT PERMITTED.
THIS DRAWING CONTAINS PROPRIETARY AND CONFIDENTIAL INFORMATION.
This document is property of Nokia Corporation

Name	BTHFMRDS2.3M	Appr	dd-mmm-yy
Assoc		Des. N.CHALLIS	06-Sep-06
		Dr. E0592687	23-Jun-10
File	/nokia/xsa_nmp/groups/hwsc1017/destiny/engine/3KTA_05/sch/bthfmrds2_2d_323_wk06	Sheet 19 of yy	0 (01)
Proj	BLUEBIRD Drw.	Print Yes V. 0.0	Edit 31

GPS COST 4.0

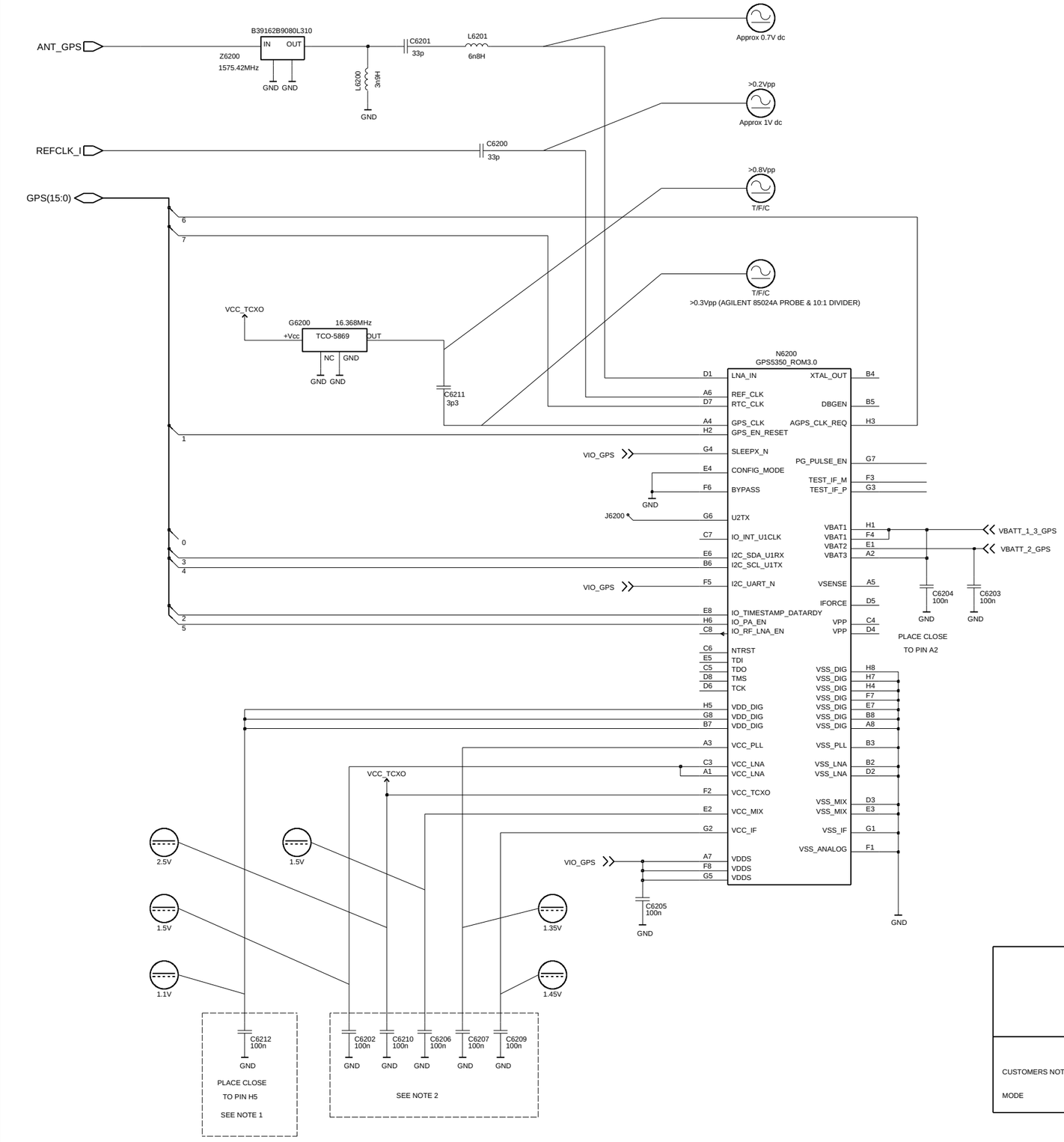

NOTES

1)TRACK INDUCTANCE FROM VDD_DIG, N6200-H5 TO C6212 MUST BE 1nH MAX.

2)TRACK INDUCTANCE FROM VCC_XXX, N6200 TO DECOUPLING CAPS MUST BE 1nH MAX.

MODE	CONNECT N6200 (PIN)	TO
CUSTOMERS NOT USING PA BLANKING MODE	IO_PA_EN	GND (PREVENTS FLOATING INPUT)

REF RANGE = 6200-6299

Copyright (C) Nokia Corporation. All rights reserved.
THIS DRAWING IS PROTECTED BY COPYRIGHT AS AN UNPUBLISHED WORK.
UNAUTHORIZED REPRODUCTION OF THIS DRAWING IS NOT PERMITTED.
THIS DRAWING CONTAINS PROPRIETARY AND CONFIDENTIAL INFORMATION.
This document is property of Nokia Corporation

Name	GPS COST 4.0 REFERENCE	Appr	dd-mmm-yy
Assoc		Des. D Noonan	07-APR-04
		Dr. E0601813	16-Jul-10
		Sheet 20 of 1	0 (01)
Proj	Drw.	Print Yes V. 0.0	Edit 22

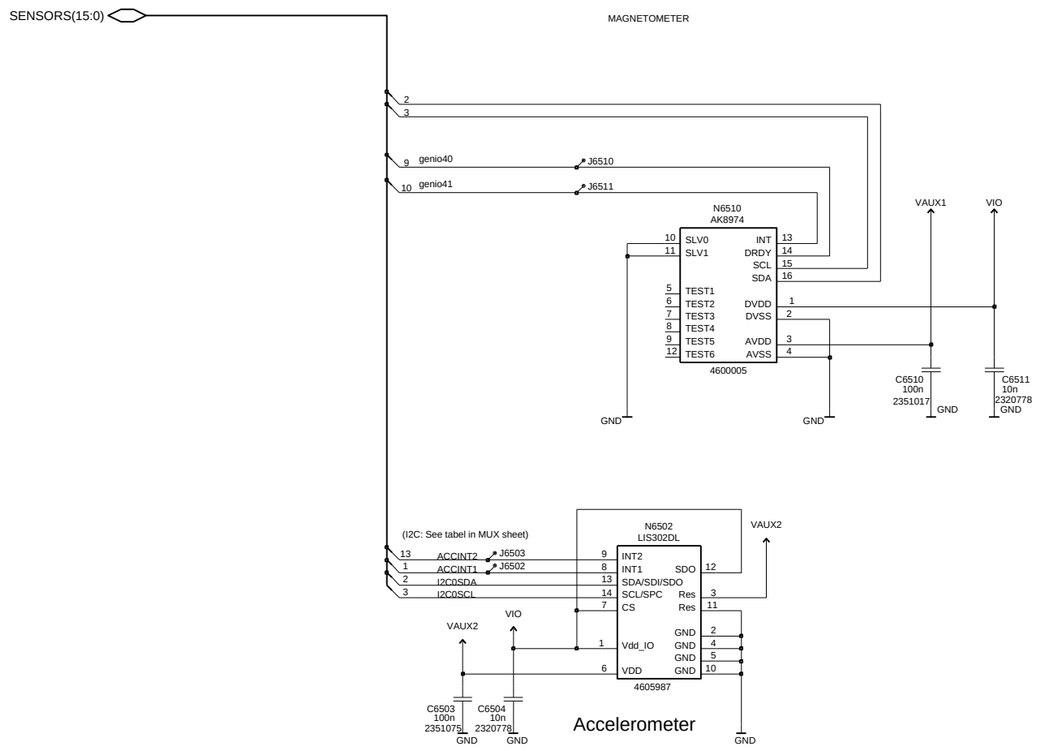

Copyright (C) Nokia Corporation. All rights reserved.
THIS DRAWING IS PROTECTED BY COPYRIGHT AS AN UNPUBLISHED WORK.
UNAUTHORIZED REPRODUCTION OF THIS DRAWING IS NOT PERMITTED.
THIS DRAWING CONTAINS PROPRIETARY AND CONFIDENTIAL INFORMATION.
This document is property of Nokia Corporation

Name	Sensors	Appr	dd-mmm-yy
Assoc	MAIN PWB	Des. HOLBEKST	21-Jan-10
		Dr. E0590401	01-Jul-10
File	/nokia/xsa_nmp/groups/hwsc1017/destiny/engine/3KTA_05/sch/sensors	Sheet 21 of yy	0 (01)
Proj	Drw.	Print Yes V. 0.0	Edit 42

ESD CRITICAL LINES!

uSD connection to be

checked against reference!

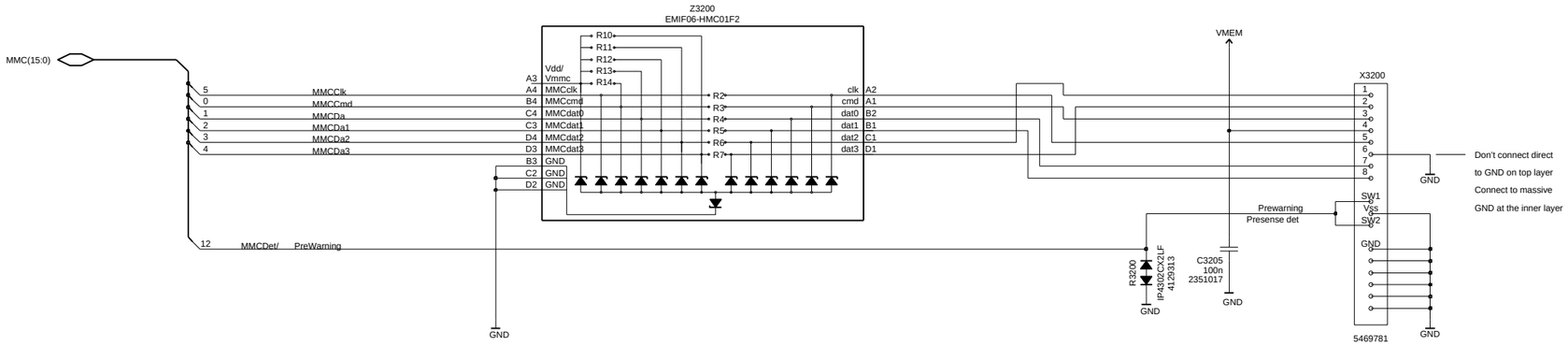

	SW
Card at Mated position	Open
Card not presense	Vss

(Check)

Copyright (C) Nokia Corporation. All rights reserved.
THIS DRAWING IS PROTECTED BY COPYRIGHT AS AN UNPUBLISHED WORK.
UNAUTHORIZED REPRODUCTION OF THIS DRAWING IS NOT PERMITTED.
THIS DRAWING CONTAINS PROPRIETARY AND CONFIDENTIAL INFORMATION.
This document is property of Nokia Corporation

Name	SD card	Appr	dd-mmm-yy
Assoc	Main PWB	Des. HOLBEKST	21-Mar-07
		Dr. E0592687	23-Jun-10
File	/nokia/xsa_nmp/groups/hwsc1017/destiny/engine/3KTA_05/sch/mmc	Sheet 22 of yy	0 (01)
Proj	Drw.	Print Yes V. 1	Edit 26

ESD CRITICAL LINES!

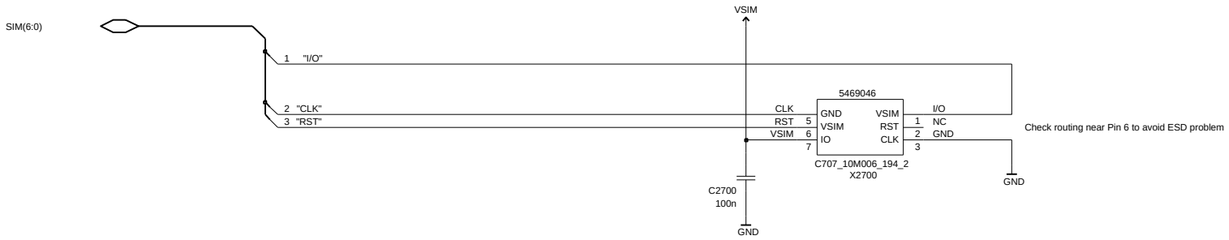

Remove filter if not needed according to ESD

Route SIM_CLK and SIM_IO signals as striplines (EMC)

Use gnd to protect other signals (ESD)

Use together with Gazoo

SIM card holder

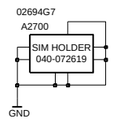

11

Copyright (C) Nokia Corporation. All rights reserved.
THIS DRAWING IS PROTECTED BY COPYRIGHT AS AN UNPUBLISHED WORK.
UNAUTHORIZED REPRODUCTION OF THIS DRAWING IS NOT PERMITTED.
THIS DRAWING CONTAINS PROPRIETARY AND CONFIDENTIAL INFORMATION.
This document is property of Nokia Corporation

Name	SIM interface	Appr	10-Aug-00
Assoc	Main PWB	Des. HOLBEKST	21-Mar-07
		Dr. E0685731	22-Jul-10
File	/nokia/xsa_nmp/groups/hwsc1017/destiny/engine/3KTA_06/sch/sim	Sheet 23 of yy	1 (01)
Proj	Drw.	Print Yes V. 1	Edit 28

AUDIOTEST(5:0)

JTAG REMOVED

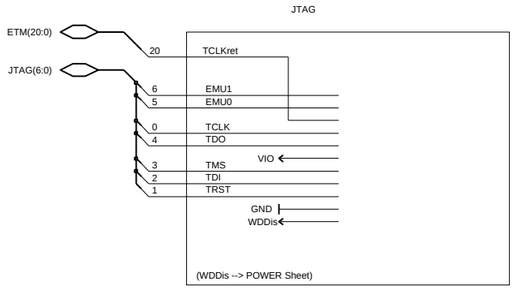

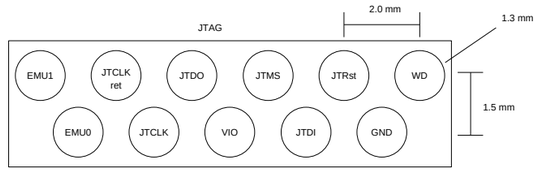

Layout pattern for JTAG flex

Placed on top layer: Use the view as it is

Placed on bottom layer: Mirror the view

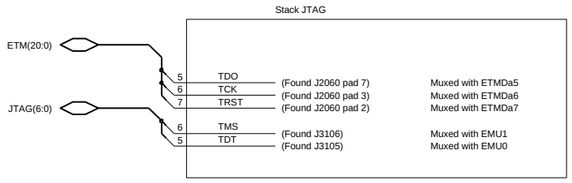

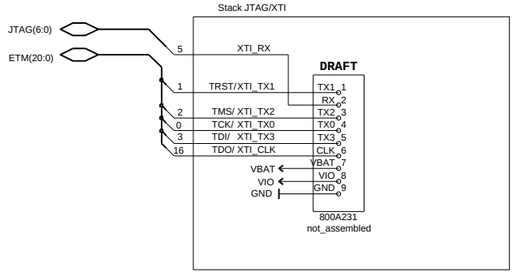

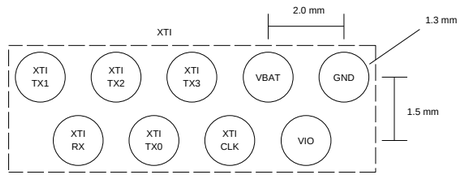

Layout pattern for XTI flex

Placed on top layer: Use the view as it is

Placed on bottom layer: Mirror the view

Copyright (C) Nokia Corporation. All rights reserved.
THIS DRAWING IS PROTECTED BY COPYRIGHT AS AN UNPUBLISHED WORK.
UNAUTHORIZED REPRODUCTION OF THIS DRAWING IS NOT PERMITTED.
THIS DRAWING CONTAINS PROPRIETARY AND CONFIDENTIAL INFORMATION.
This document is property of Nokia Corporation

Name	Test Interface	Appr	dd-mmm-yy
Assoc	Main PWB	Des. HOLBEKST	21-Mar-07
		Dr. E0592687	07-Jul-10
File		Sheet 24 of yy	1 (01)
Proj	Seoul P3428 / Courage P3489 Drw.	Print Yes V. 1	Edit 20

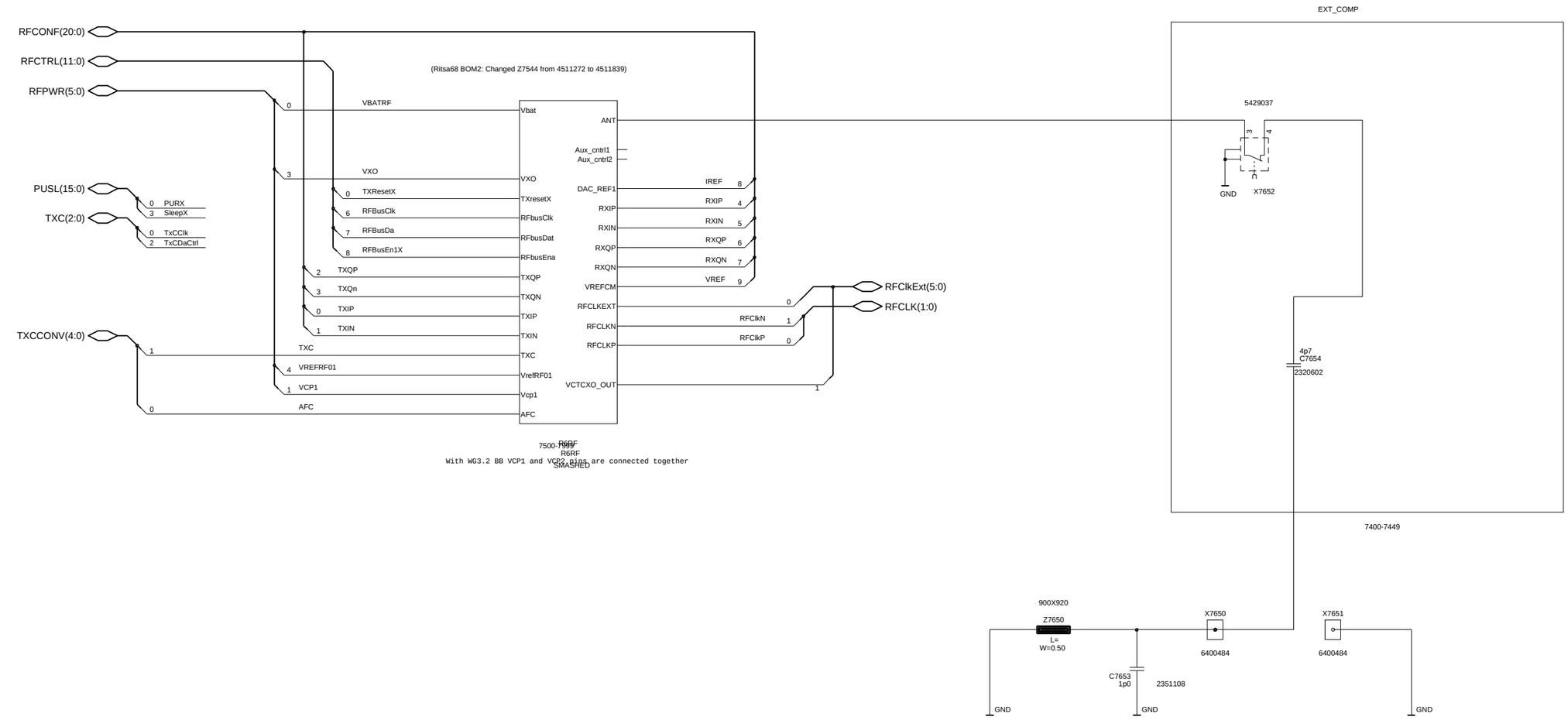

Copyright (C) Nokia Corporation. All rights reserved.
THIS DRAWING IS PROTECTED BY COPYRIGHT AS AN UNPUBLISHED WORK.
UNAUTHORIZED REPRODUCTION OF THIS DRAWING IS NOT PERMITTED.
THIS DRAWING CONTAINS PROPRIETARY AND CONFIDENTIAL INFORMATION.
This document is property of Nokia Corporation

Name	Ritsa 6 - RF schematic	Appr	dd-mmm-yy
Assoc	Main PWB	Des. HOLBEKST	02-Sep-08
		Dr. E0590401	09-Jul-10
File	/nokia/xsa_nmp/groups/hwsc1017/destiny/engine/3KTA_05/sch/cmt_engine/RF	Sheet 25 of yy	0 (01)
Proj	Drw.	Print Yes V. 1	Edit 42

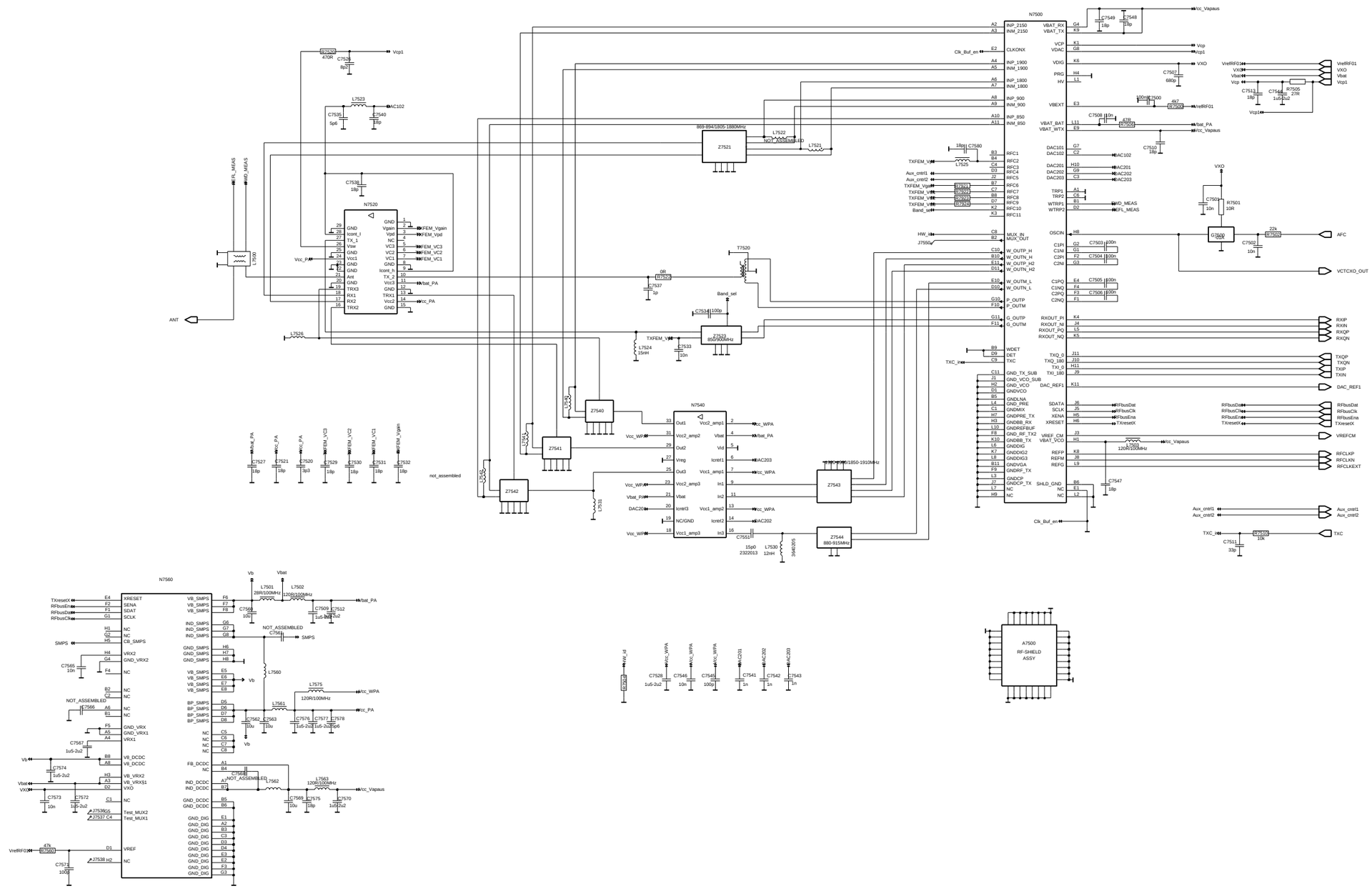

Name RF		Appr	dd-mmm-yy
Assoc -		Des. Jouko Koski	29-Jan-07
Block_28		Dr. E0592687	05-Jul-10
		Sheet xx of yy	0 (01)
Proj	Drw.	Print Yes V. 0.0	Edit 53

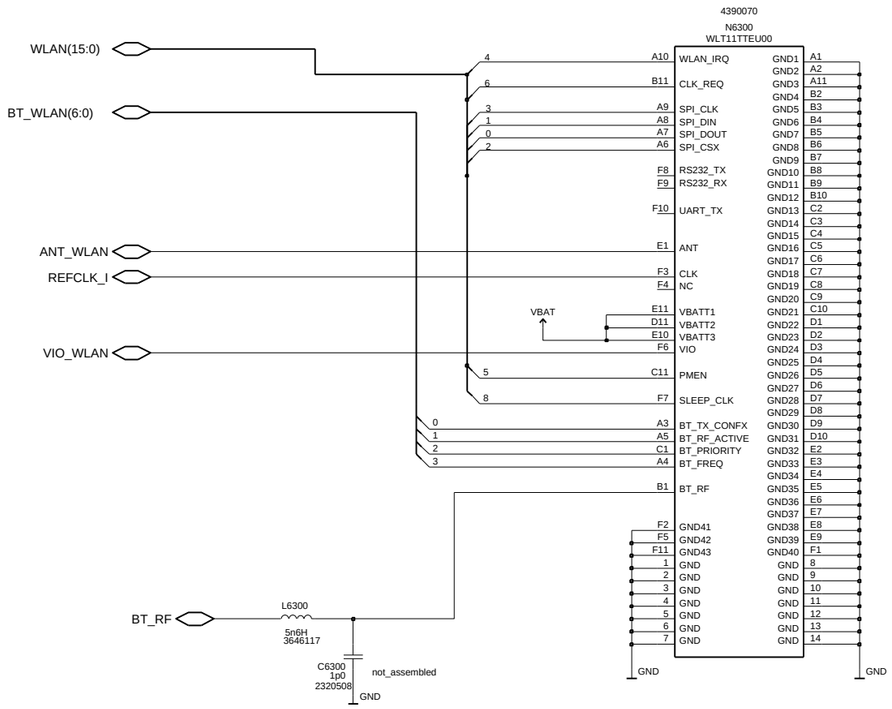

SQCLK_SUPPLY

REFCLK_O

Copyright (C) Nokia Corporation. All rights reserved.
THIS DRAWING IS PROTECTED BY COPYRIGHT AS AN UNPUBLISHED WORK.
UNAUTHORIZED REPRODUCTION OF THIS DRAWING IS NOT PERMITTED.
THIS DRAWING CONTAINS PROPRIETARY AND CONFIDENTIAL INFORMATION.
This document is property of Nokia Corporation

Name	Size 4.0	Appr	dd-mmm-yy
Assoc	WLAN	Des. MMe	04-Apr-07
		Dr. E0590401	30-Jun-10
File	/nokia/xsa_nmp/groups/hwsc1017/destiny/engine/3KTA_05/sch/size4_0	Sheet 32 of yy	0 (01)
Proj	Gadget Drw.	Print Yes V. 0.0	Edit 52