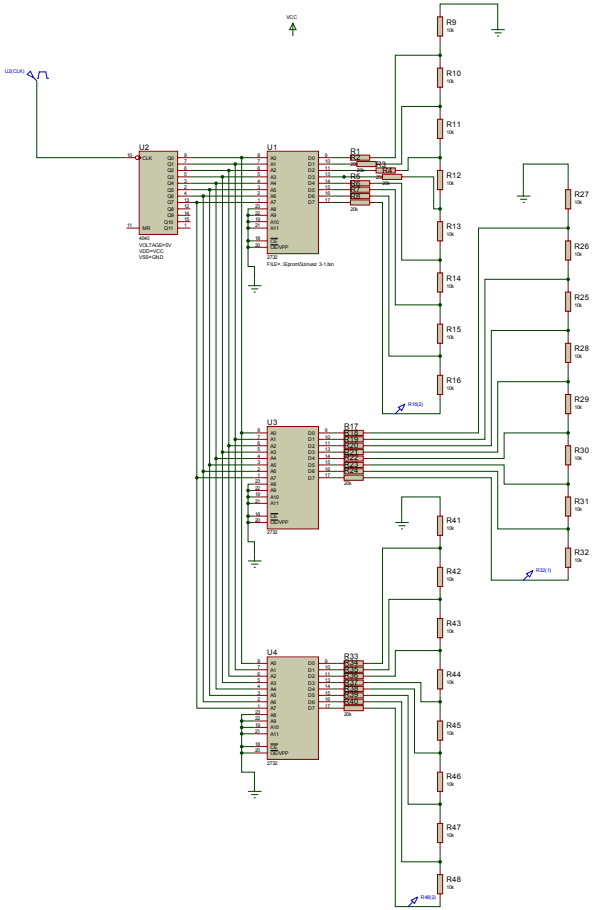
VCC
U2
U1
U3
U4
R9
R10
R11
R12
R13
R14
R15
R16
R17
R27
R26
R25
R28
R29
R30
R31
R32
R41
R42
R43
R44
R45
R46
R47
R48
R33

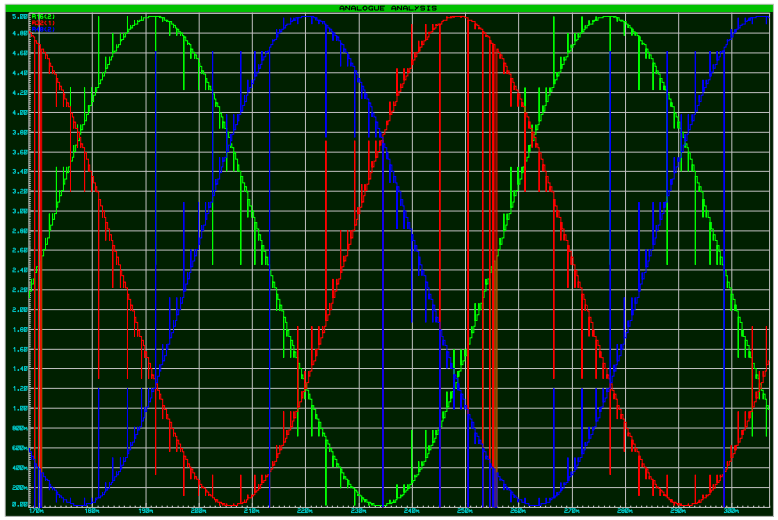
ANALOGUE ANALYSIS