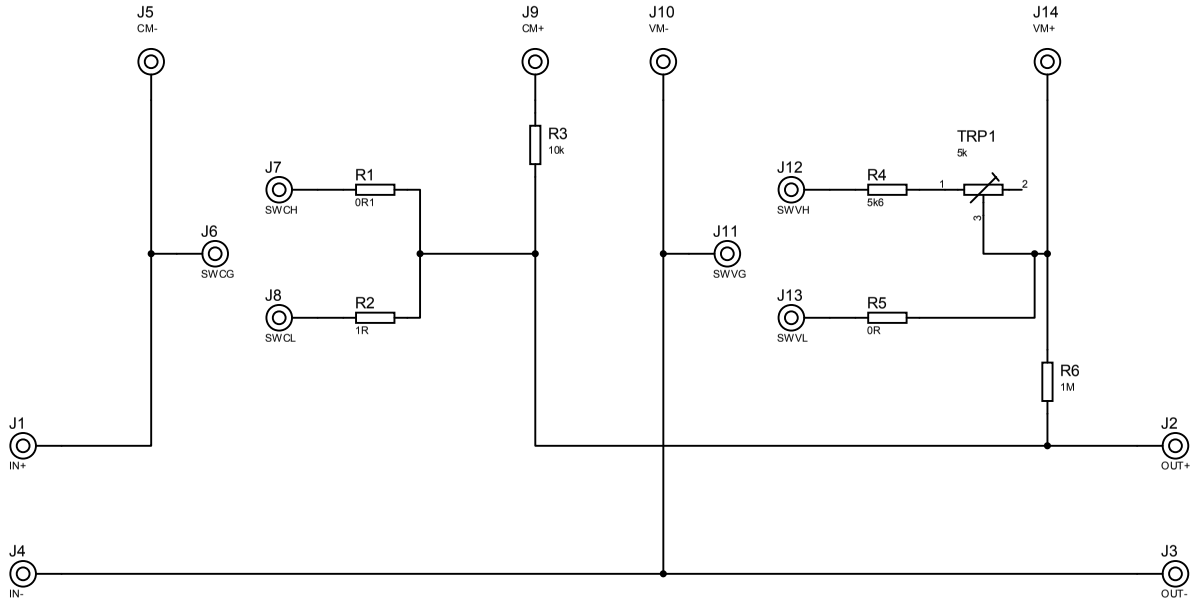
J5
CM-
J9
CM+
J10
VM-
J14
VM+
R3
10k
TRP1
5k
J7
SWCH
R1
0R1
J12
SWVH
R4
5k6
1
2
3
J6
SWCG
J11
SWVG
J8
SWCL
R2
1R
J13
SWVL
R5
0R
R6
1M
J1
IN+
J2
OUT+
J4
IN-
J3
OUT-