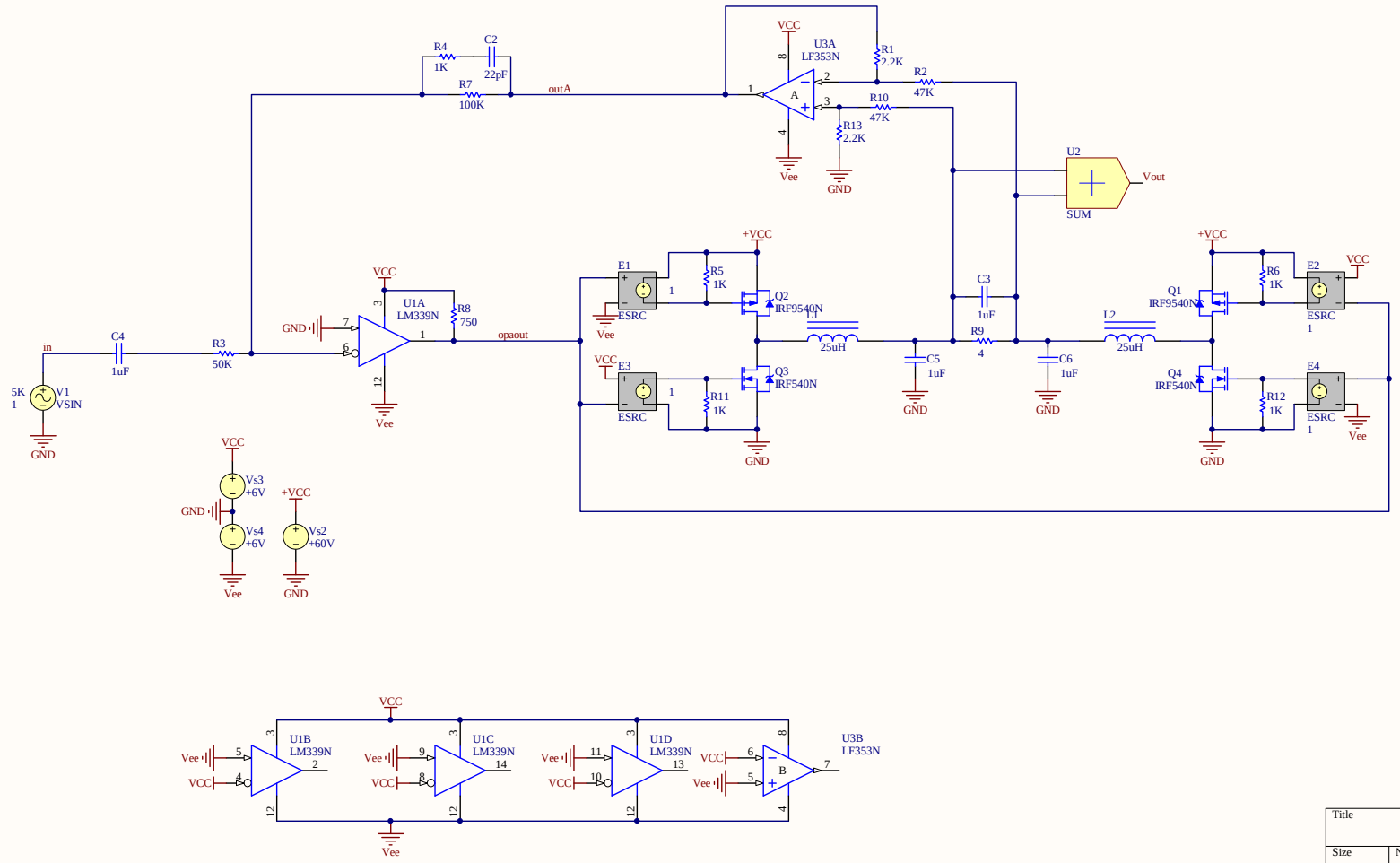


| Title | | |
|---|---|---|
| Size A3 | Number | Revision |
| Date: 2011.09.26. | | Sheet of |
| File: D:\Sunci\..\UcD simple supply.SchDoc | | Drawn By: |