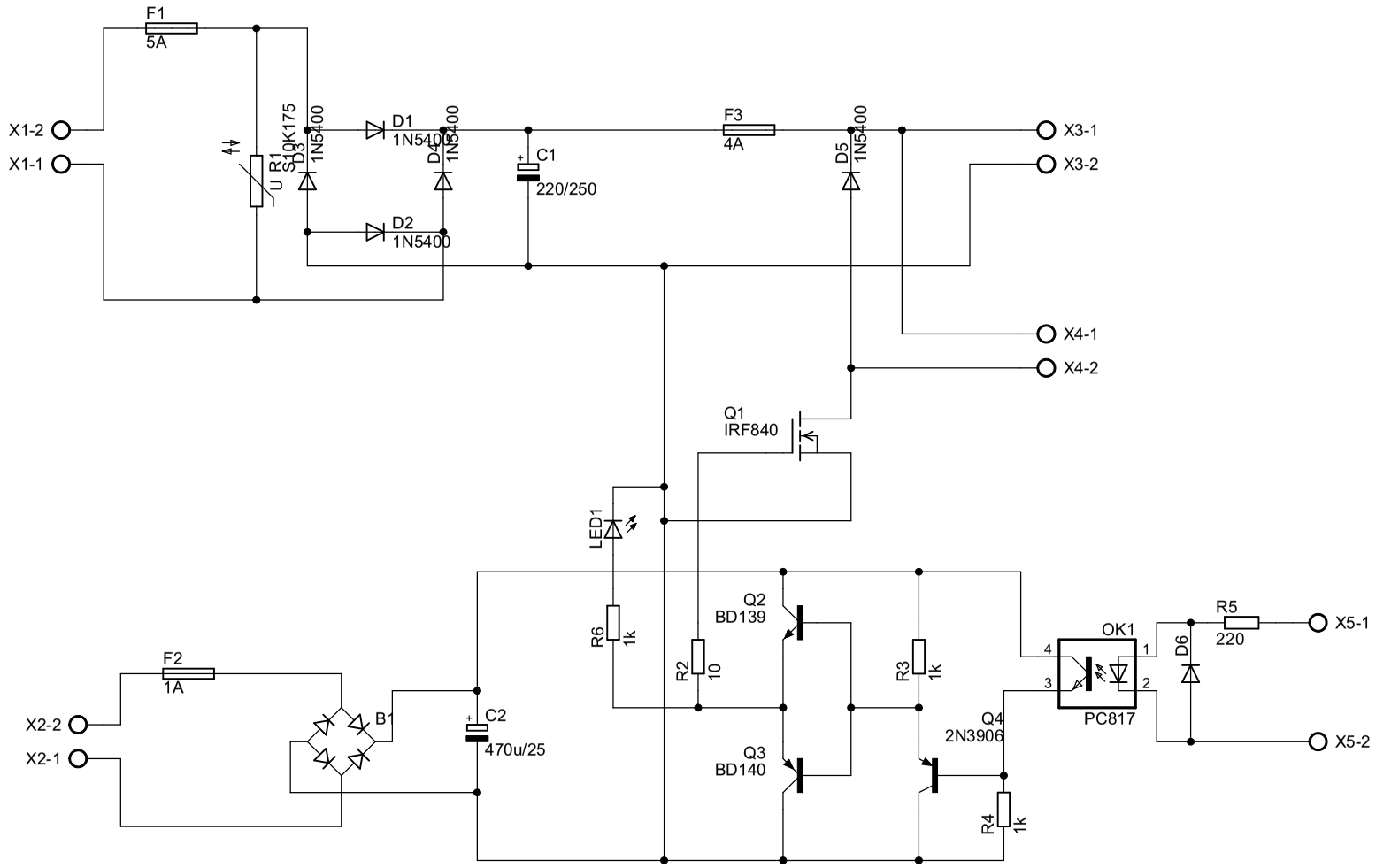

TITLE: rolmot1

Document Number:

REV:

Date: 31/05/2009 01:40:56 p.m.

Sheet: 1/1