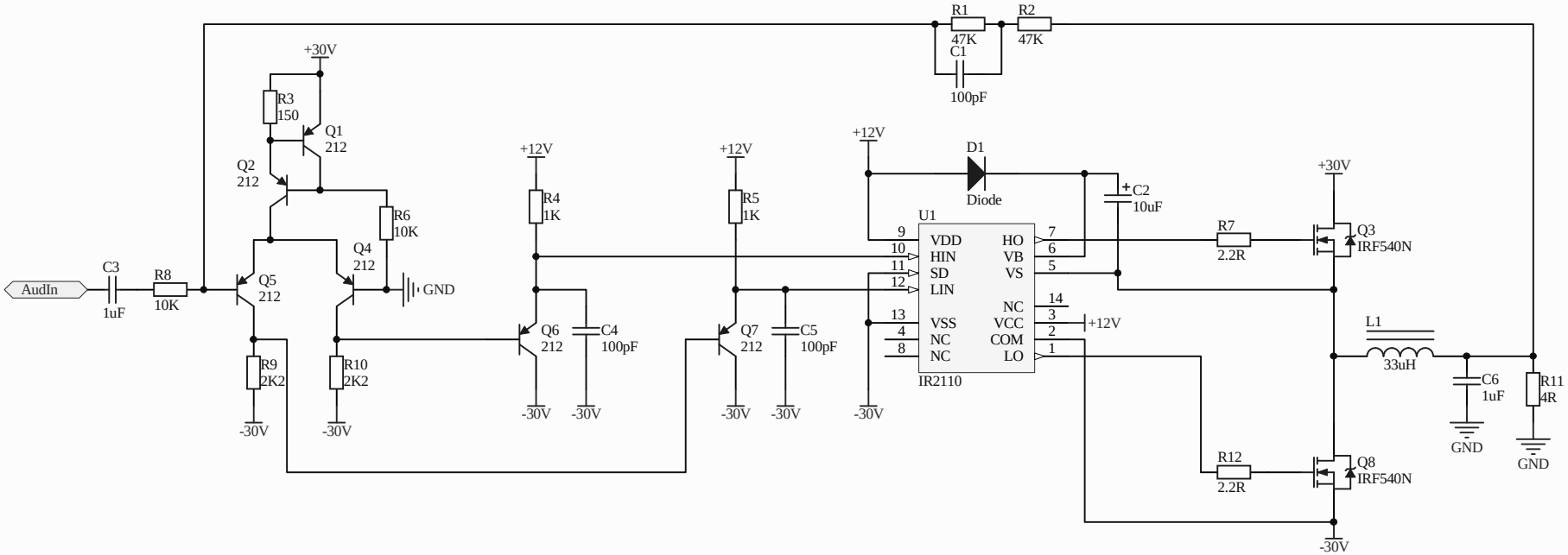

Title		
Size A4	Number	Revision
Date: 2011.11.24.		Sheet of
File: D:\Sunci\..\Sheet1 ucd.SchDoc		Drawn By: