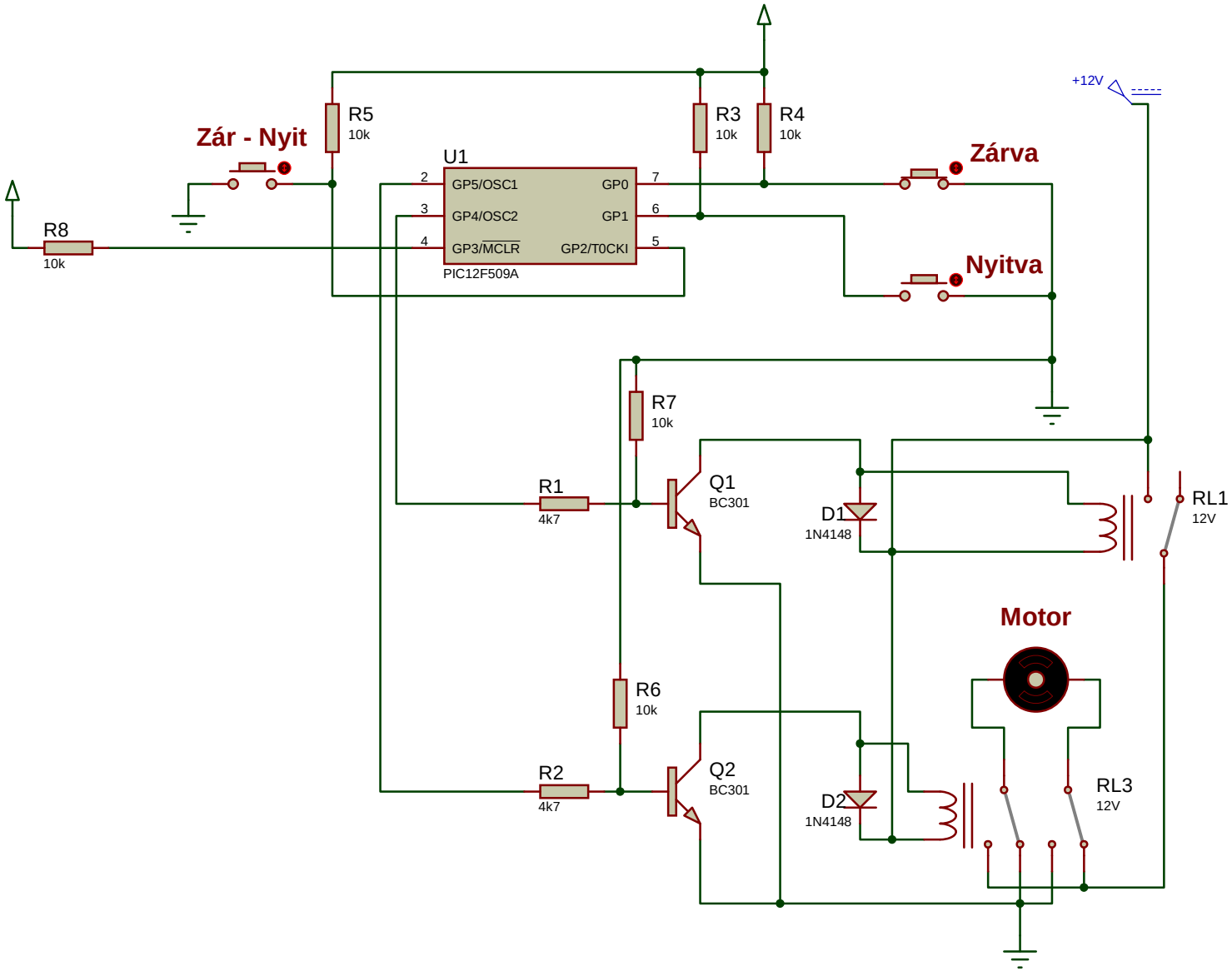
+12V
R5
10k
Zár - Nyit
R3
10k
R4
10k
Zárva
U1
2
GP5/OSC1
GP0
7
3
GP4/OSC2
GP1
6
4
GP3/MCLR
GP2/T0CKI
5
PIC12F509A
R8
10k
Nyitva
R7
10k
R1
4k7
Q1
BC301
D1
1N4148
RL1
12V
Motor
R6
10k
R2
4k7
Q2
BC301
D2
1N4148
RL3
12V