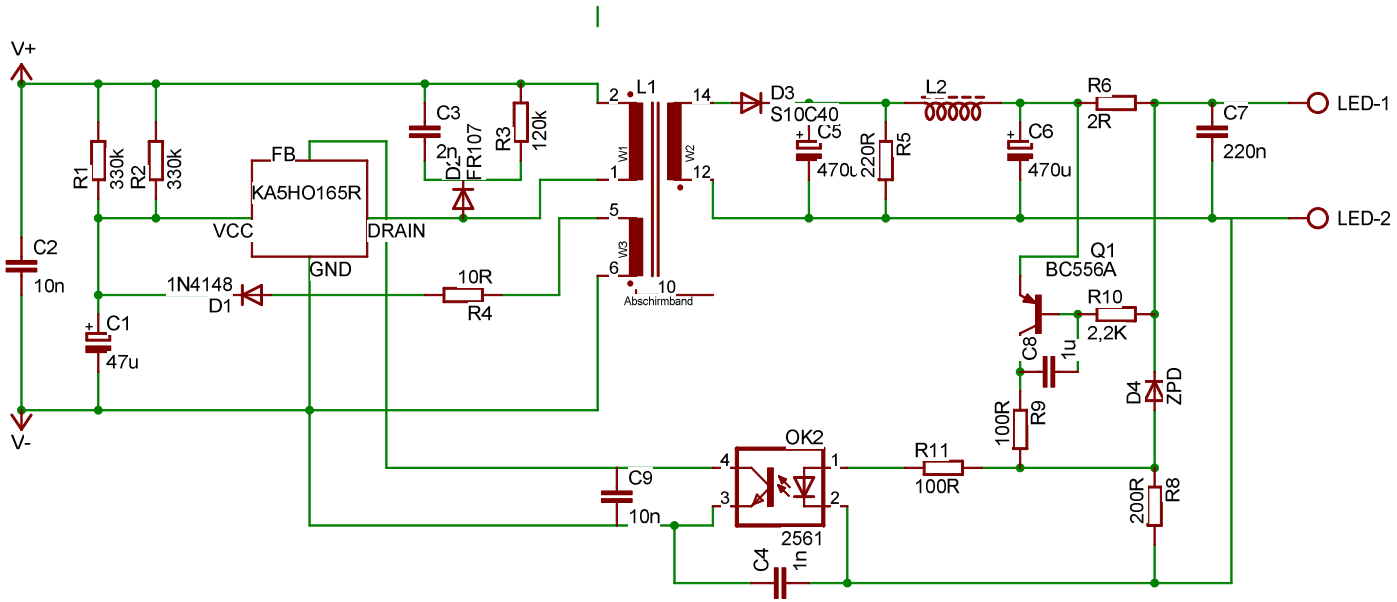

Current led driver with KF

not saved!

Sheet: 1/1