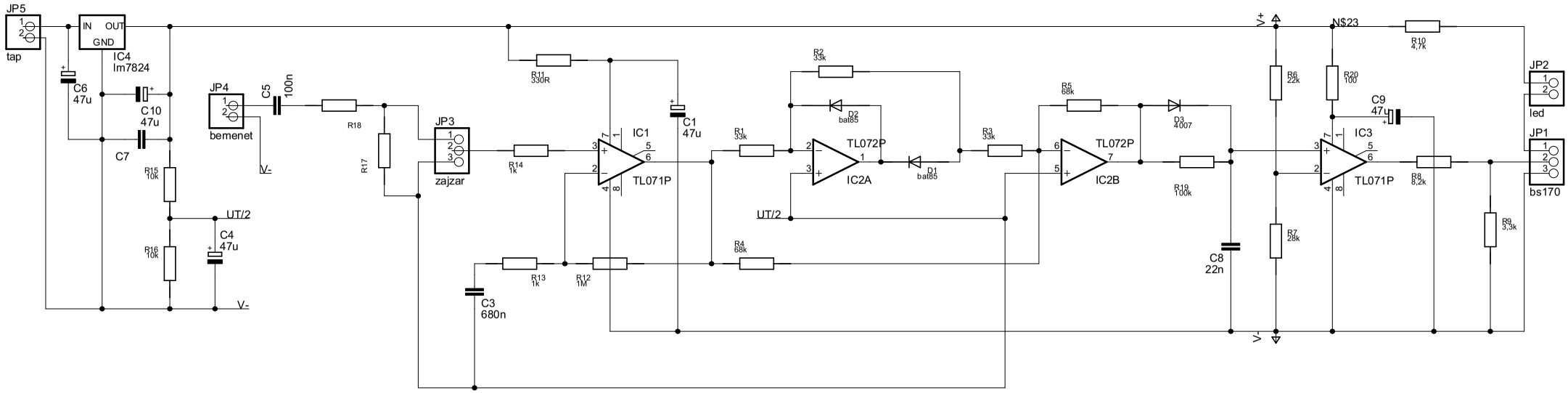
JP5
tap
IN
OUT
GND
IC4
lm7824
C6
47u
C10
47u
C7
R15
10k
R16
10k
UT/2
C4
47u
V-
JP4
bemenet
C5
100n
V-
R18
R17
JP3
zajzar
R14
1k
R11
330R
C1
47u
IC1
TL071P
R13
1k
R12
1M
C3
680n
R1
33k
R4
68k
R2
33k
D2
bat85
IC2A
TL072P
D1
bat85
UT/2
R3
33k
R5
68k
IC2B
TL072P
D3
4007
R19
100k
C8
22n
V+
R6
22k
R7
28k
V-
N$23
R20
100
C9
47u
IC3
TL071P
R10
4,7k
R8
8,2k
R9
3,3k
JP2
led
JP1
bs170