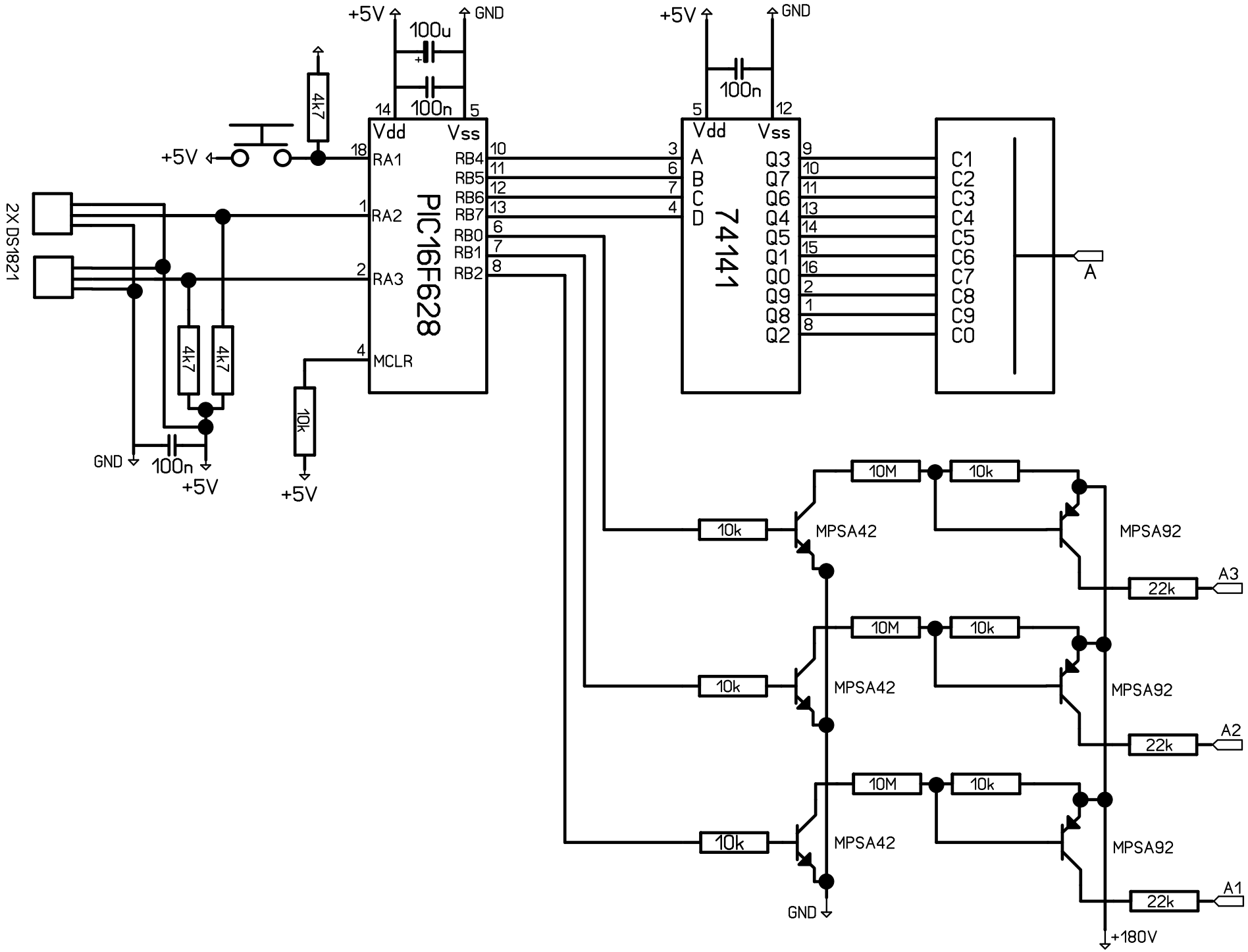
+5V
GND
100u
100n
4k7
+5V
14
5
Vdd
Vss
18
RA1
1
RA2
2
RA3
4
MCLR
RB4
RB5
RB6
RB7
RB0
RB1
RB2
10
11
12
13
6
7
8
PIC16F628
2X DS1821
4k7
4k7
GND
100n
+5V
10k
+5V
+5V
GND
100n
5
12
Vdd
Vss
3
A
6
B
7
C
4
D
74141
9
Q3
10
Q7
11
Q6
13
Q4
14
Q5
15
Q1
16
Q0
2
Q9
1
Q8
8
Q2
C1
C2
C3
C4
C5
C6
C7
C8
C9
C0
A
10M
10k
10k
MPSA42
MPSA92
22k
A3
10M
10k
10k
MPSA42
MPSA92
22k
A2
10M
10k
10k
MPSA42
MPSA92
22k
A1
GND
+180V