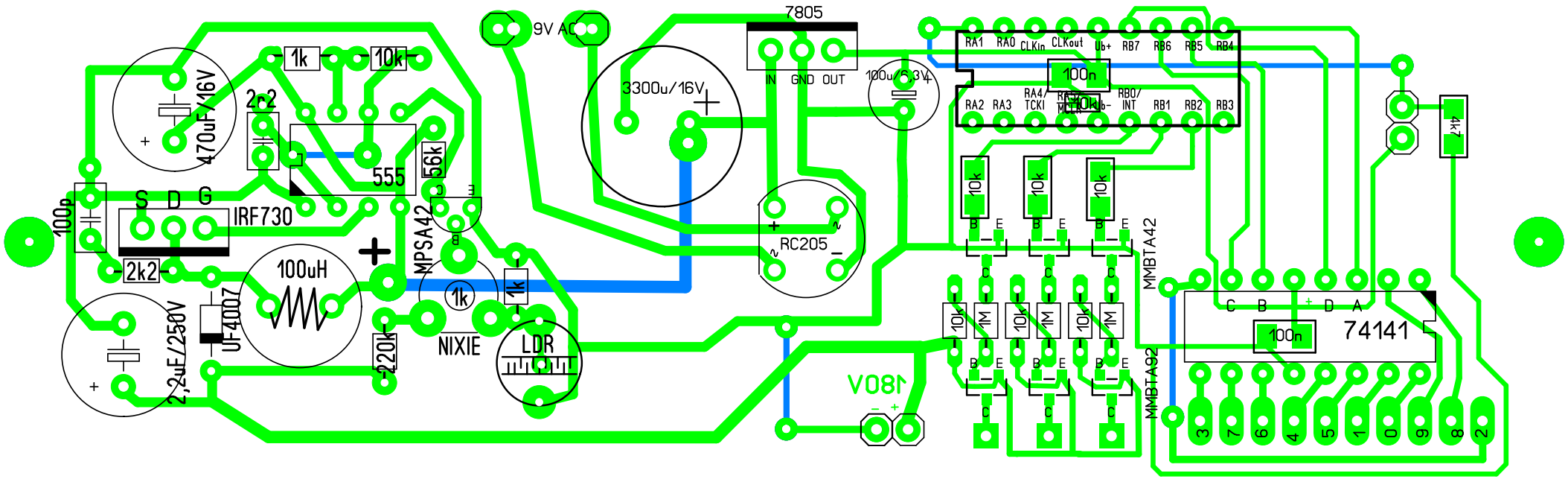
9V AC
7805
IN GND OUT
3300u/16V
100u/6,3V
RC205
180V
470uF/16V
2r2
1k
10k
555
56k
S D G
IRF730
100p
2k2
100uH
UF4007
2,2uF/250V
MPSA42
1k
220k
NIXIE
LDR
RA1 RA0 CLKin CLKout Ub+ RB7 RB6 RB5 RB4
RA2 RA3 RA4/ TCKI RA5/ MCLR Ub- RB0/ INT RB1 RB2 RB3
100n
10k
1M
MMBTA42
MMBTA92
C B D A
74141
3 7 6 4 5 1 0 9 8 2
4k7