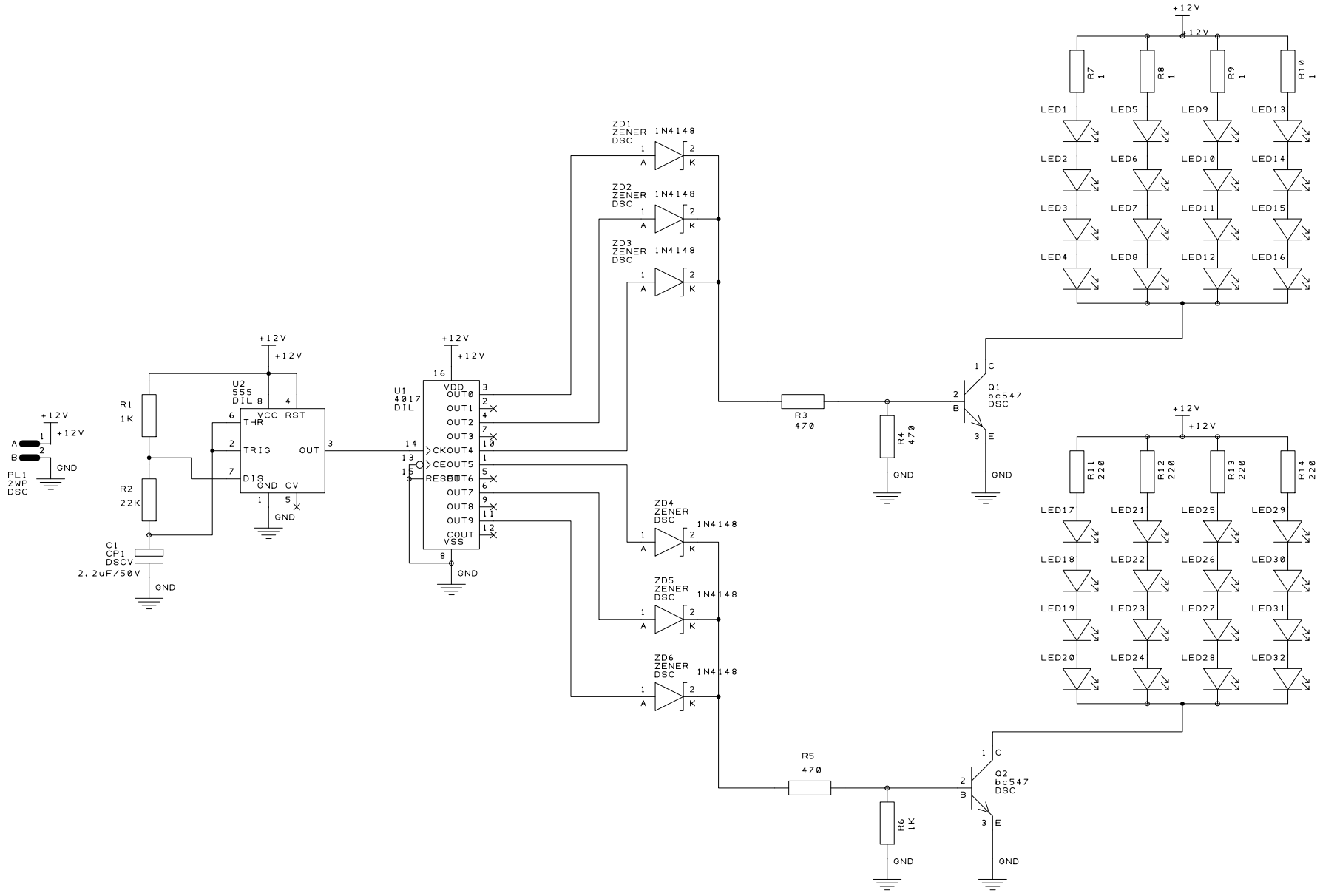

E	D	C	B	A	Drawn	Check	Projection Do Not Scale		
Drn	Drn	Drn	Drn	Project LED Police Light KIT			Client		
Chk	Chk	Chk	Chk	Title elec2rak			Filename	Drawing No. EKIT001	Sheet 1 of 1