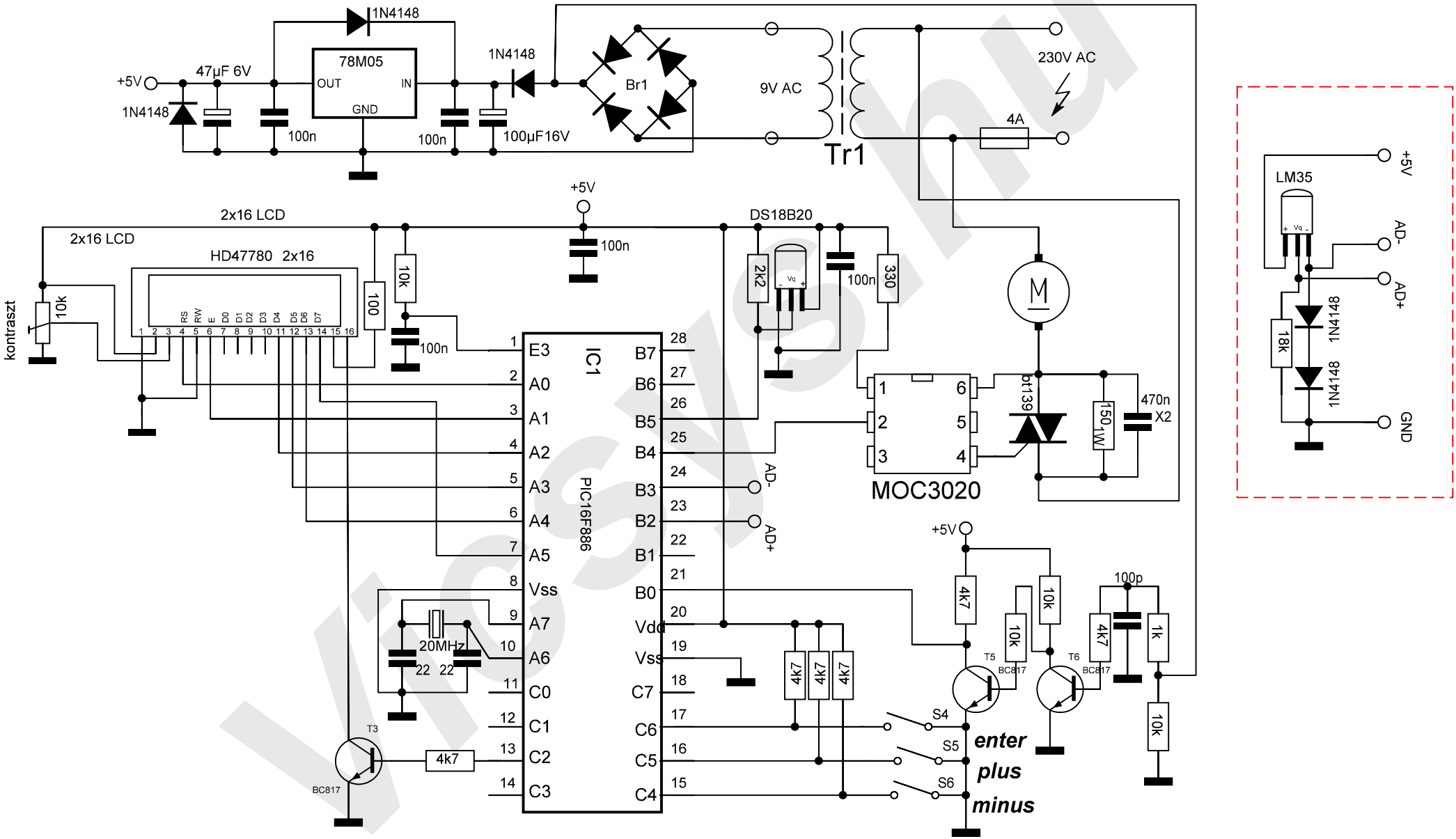
+5V
47µF 6V
1N4148
78M05
OUT
IN
GND
100n
100µF16V
Br1
9V AC
Tr1
230V AC
4A
2x16 LCD
HD47780 2x16
kontraszt
10k
100
DS18B20
2k2
330
M
MOC3020
bt139
150 1W
470n X2
IC1
PIC16F886
E3
A0
A1
A2
A3
A4
A5
Vss
A7
A6
C0
C1
C2
C3
B7
B6
B5
B4
B3
B2
B1
B0
Vdd
C7
C6
C5
C4
AD-
AD+
20MHz
22
4k7
T3
BC817
T5
T6
100p
1k
S4
S5
S6
enter
plus
minus
LM35
18k
1N4148
GND