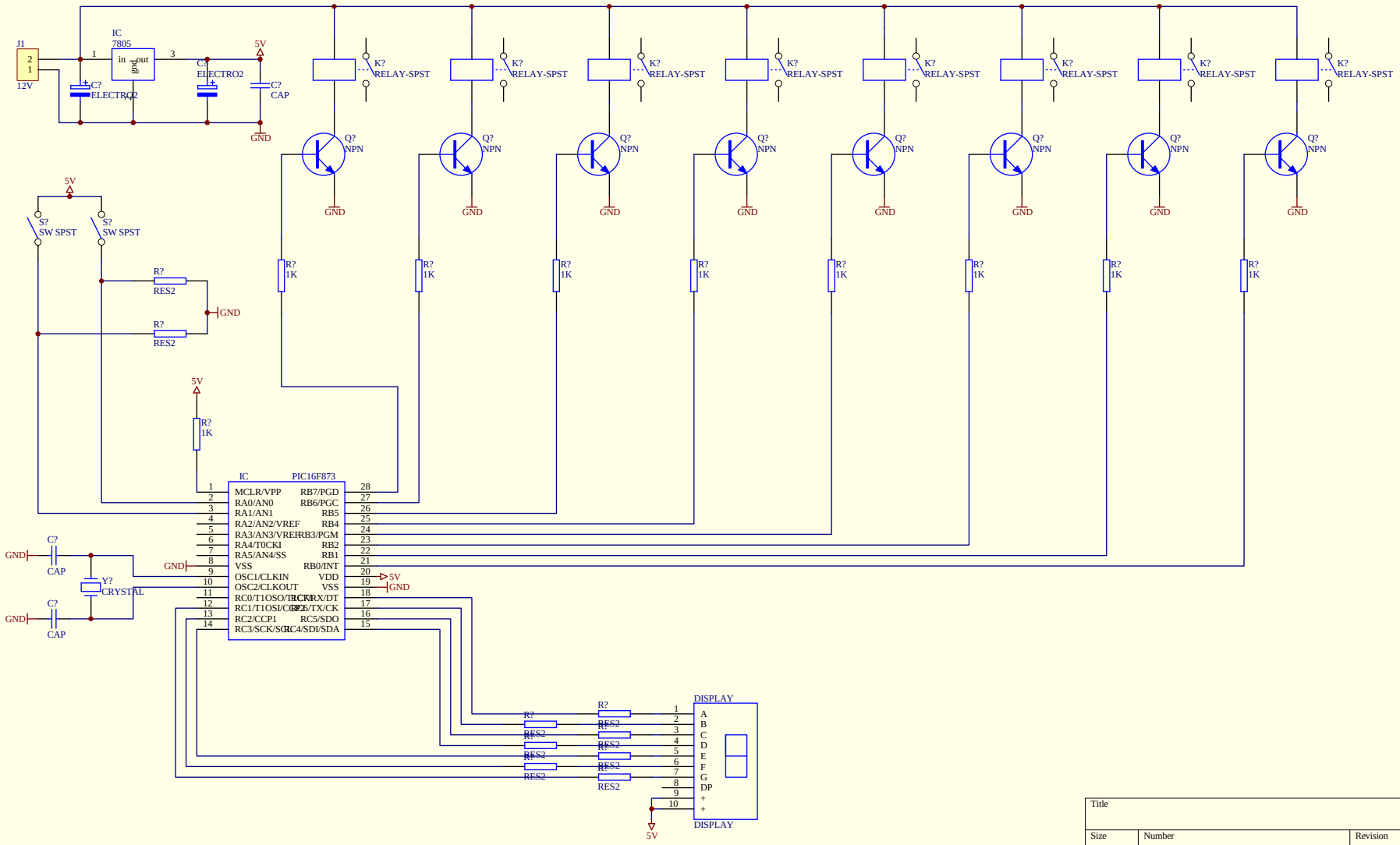

Title		
Size B	Number	Revision
Date: 4-Mar-2013	Sheet of	
File: D:\!aktuell\temp\teszt\lepteto\lepteto.Ddb	Drawn By:	