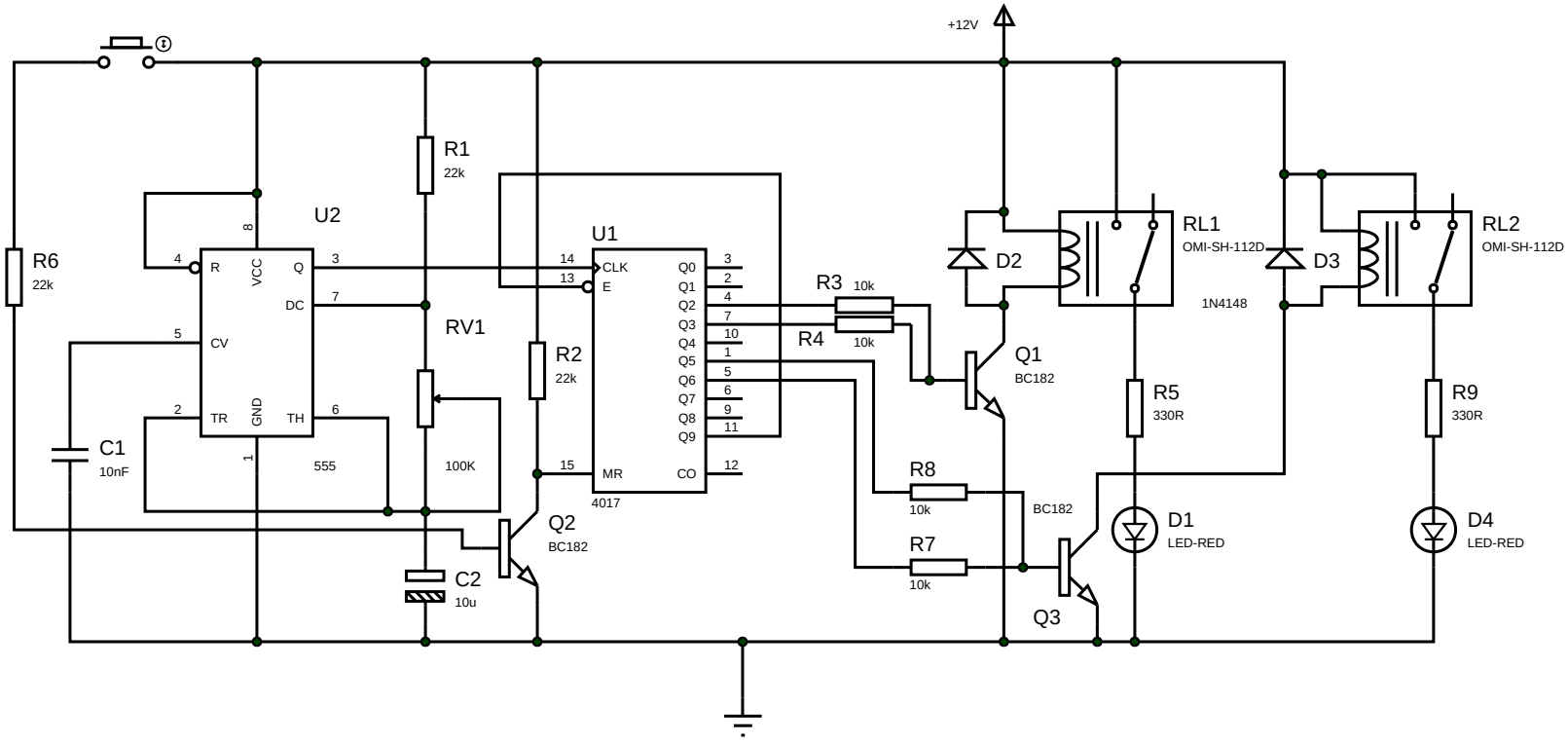
+12V
R1
22k
U2
R6
22k
R
VCC
Q
DC
CV
TR
GND
TH
555
C1
10nF
RV1
100K
C2
10u
R2
22k
Q2
BC182
U1
CLK
E
MR
CO
Q0
Q1
Q2
Q3
Q4
Q5
Q6
Q7
Q8
Q9
4017
R3
10k
R4
10k
R8
10k
R7
10k
Q1
BC182
BC182
Q3
D2
1N4148
RL1
OMI-SH-112D
D3
RL2
OMI-SH-112D
R5
330R
R9
330R
D1
LED-RED
D4
LED-RED