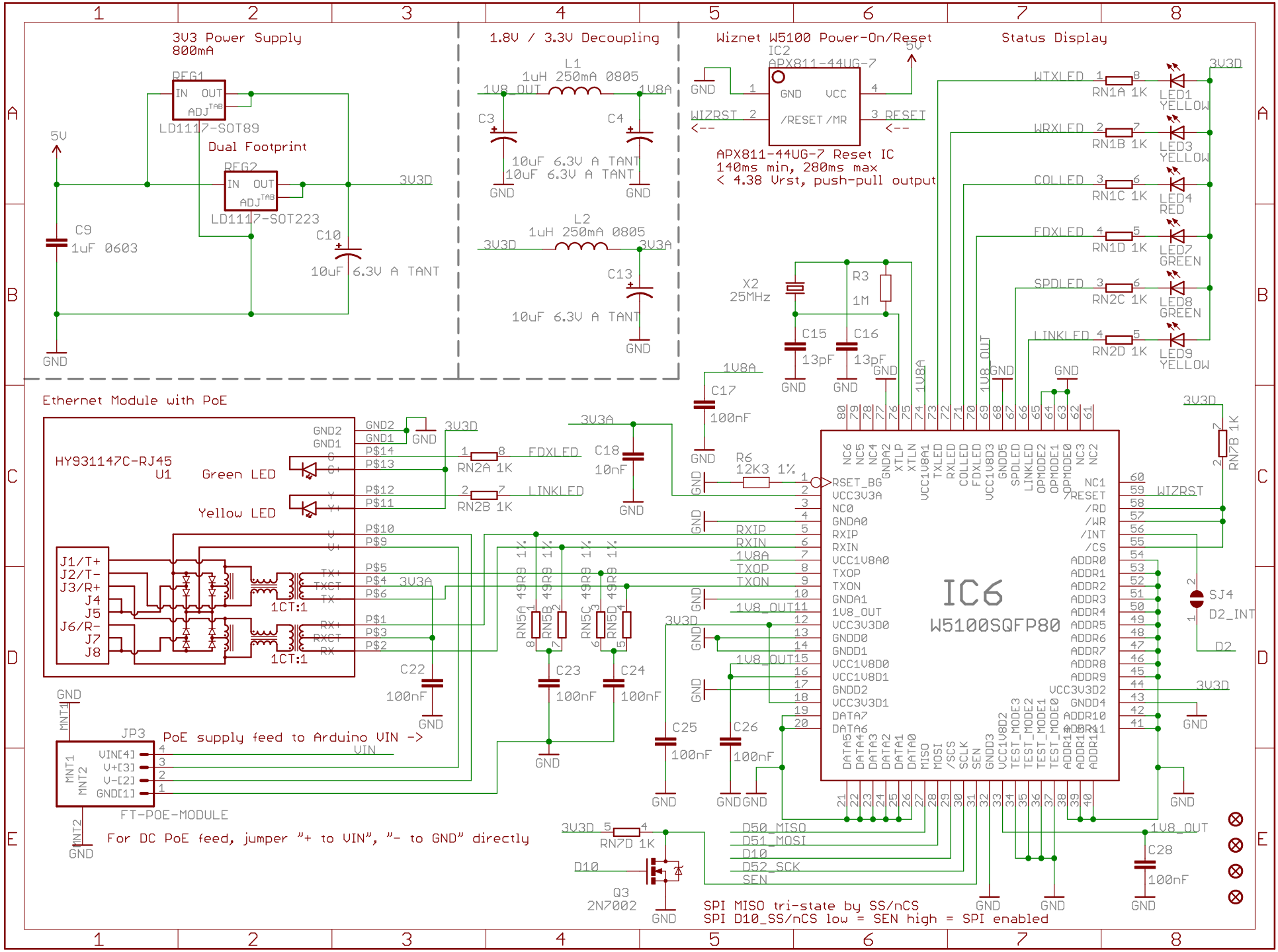
3V3 Power Supply
800mA
REG1
LD1117-SOT89
Dual Footprint
REG2
LD1117-SOT223
5V
3V3D
C9
1uF 0603
C10
10uF 6.3V A TANT
GND
1.8V / 3.3V Decoupling
L1
1uH 250mA 0805
1V8_OUT
1V8A
C3
C4
10uF 6.3V A TANT
10uF 6.3V A TANT
L2
1uH 250mA 0805
3V3A
C13
10uF 6.3V A TANT
Wiznet W5100 Power-On/Reset
IC2
APX811-44UG-7
WIZRST
RESET
APX811-44UG-7 Reset IC
140ms min, 280ms max
< 4.38 Vrst, push-pull output
Status Display
WTXLED
WRXLED
COLLED
FDXLED
SPDLED
LINKLED
RN1A 1K
RN1B 1K
RN1C 1K
RN1D 1K
RN2C 1K
RN2D 1K
LED1 YELLOW
LED3 YELLOW
LED4 RED
LED7 GREEN
LED8 GREEN
LED9 YELLOW
X2
25MHz
R3
1M
C15
13pF
C16
13pF
C17
100nF
R6
12K3 1%
C18
10nF
Ethernet Module with PoE
HY931147C-RJ45
U1
Green LED
Yellow LED
RN2A 1K
RN2B 1K
J1/T+
J2/T-
J3/R+
J4
J5
J6/R-
J7
J8
1CT:1
C22
100nF
RN5A 49R9 1%
RN5B 49R9 1%
RN5C 49R9 1%
RN5D 49R9 1%
C23
100nF
C24
100nF
C25
100nF
C26
100nF
IC6
W5100SQFP80
RSET_BG
VCC3V3A
RXIP
RXIN
TXOP
TXON
1V8_OUT
WIZRST
/RD
/WR
/INT
/CS
ADDR0
ADDR1
ADDR2
ADDR3
ADDR4
ADDR5
ADDR6
ADDR7
ADDR8
ADDR9
ADDR10
ADDR11
DATA0
DATA1
DATA2
DATA3
DATA4
DATA5
DATA6
DATA7
MISO
MOSI
/SCS
SCLK
SEN
D2_INT
SJ4
D2
RN7B 1K
JP3
FT-POE-MODULE
PoE supply feed to Arduino VIN ->
VIN
For DC PoE feed, jumper "+ to VIN", "- to GND" directly
RN7D 1K
D10
Q3
2N7002
D50_MISO
D51_MOSI
D10
D52_SCK
SEN
C28
100nF
SPI MISO tri-state by SS/nCS
SPI D10_SS/nCS low = SEN high = SPI enabled

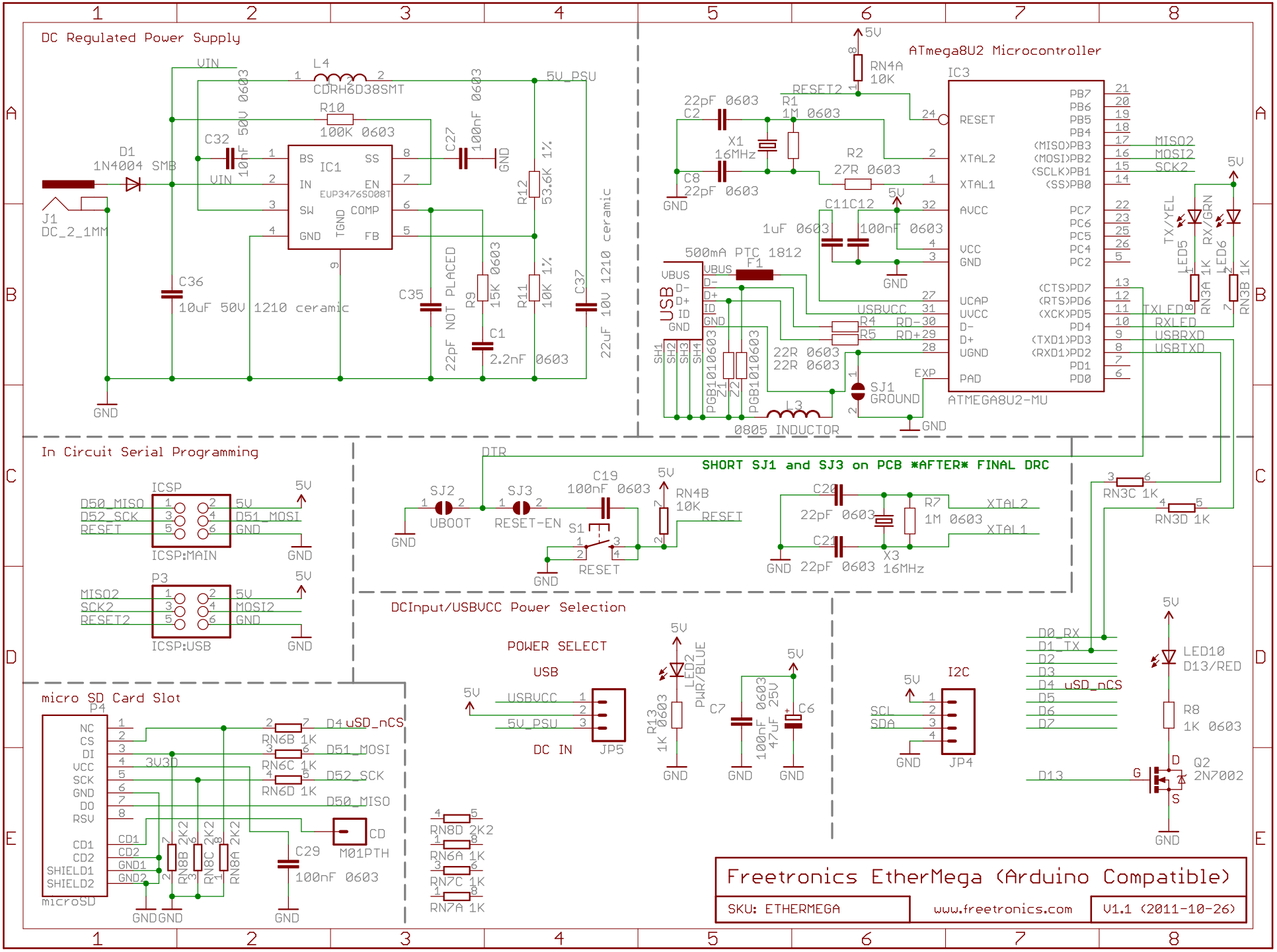
DC Regulated Power Supply
VIN
L4
CDRH6D38SMT
5V_PSU
R10
100K 0603
C32
10nF 50V 0603
C27
100nF 0603
GND
D1
1N4004 SMB
IC1
EUP3476S008T
BS
SS
IN
EN
SW
COMP
TGND
GND
FB
R12
53.6K 1%
J1
DC_2_1MM
C36
10uF 50V 1210 ceramic
C35
22pF NOT PLACED
R9
15K 0603
R11
10K 1%
C1
2.2nF 0603
C37
22uF 10V 1210 ceramic
ATmega8U2 Microcontroller
5V
RN4A
10K
RESET2
IC3
22pF 0603
C2
R1
1M 0603
X1
16MHz
C8
22pF 0603
R2
27R 0603
C11
C12
1uF 0603
100nF 0603
500mA PTC 1812
F1
USB
VBUS
D-
D+
ID
GND
SH1
SH2
SH3
SH4
PGB1010603
Z1
Z2
USBVCC
R4
R5
RD-
RD+
22R 0603
22R 0603
SJ1
GROUND
EXP
L3
0805 INDUCTOR
RESET
XTAL2
XTAL1
AVCC
VCC
UCAP
UVCC
UGND
PAD
PB7
PB6
PB5
PB4
(MISO)PB3
(MOSI)PB2
(SCLK)PB1
(SS)PB0
PC7
PC6
PC5
PC4
PC2
(CTS)PD7
(RTS)PD6
(XCK)PD5
PD4
(TXD1)PD3
(RXD1)PD2
PD1
PD0
ATMEGA8U2-MU
MISO2
MOSI2
SCK2
TXLED
RXLED
USBRXD
USBTXD
TX/YEL
RX/GRN
LED5
LED6
RN3A 1K
RN3B 1K
In Circuit Serial Programming
ICSP
D50_MISO
D52_SCK
RESET
D51_MOSI
ICSP:MAIN
P3
MISO2
SCK2
RESET2
MOSI2
ICSP:USB
DTR
SHORT SJ1 and SJ3 on PCB *AFTER* FINAL DRC
SJ2
UBOOT
SJ3
RESET-EN
C19
100nF 0603
RN4B
10K
S1
C20
22pF 0603
R7
1M 0603
C21
X3
16MHz
RN3C 1K
RN3D 1K
DCInput/USBVCC Power Selection
POWER SELECT
USB
USBVCC
5V_PSU
DC IN
JP5
R13
1K 0603
LED2
PWR/BLUE
C7
100nF 0603
C6
47uF 25V
I2C
SCL
SDA
JP4
D0_RX
D1_TX
D2
D3
D4 uSD_nCS
D5
D6
D7
LED10
D13/RED
R8
1K 0603
Q2
2N7002
D13
micro SD Card Slot
P4
NC
CS
DI
VCC
SCK
GND
DO
RSV
CD1
CD2
GND1
GND2
SHIELD1
SHIELD2
microSD
3V3D
RN6B 1K
RN6C 1K
RN6D 1K
D4 uSD_nCS
D51_MOSI
D52_SCK
D50_MISO
RN8B 2K2
RN8C 2K2
RN8A 2K2
C29
100nF 0603
CD
M01PTH
RN8D 2K2
RN6A 1K
RN7C 1K
RN7A 1K
Freetronics EtherMega (Arduino Compatible)
SKU: ETHERMEGA
www.freetronics.com
V1.1 (2011-10-26)

# Prototyping Area

Draw your project schematic here

Headers / Solder Pads

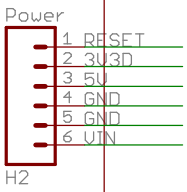


D50, 51, 52, 53 used by Ethernet interface.
D2 used if Wiznet Ethernet IC "interrupt" jumper enabled.
D4 used by microSD card Chip Select.
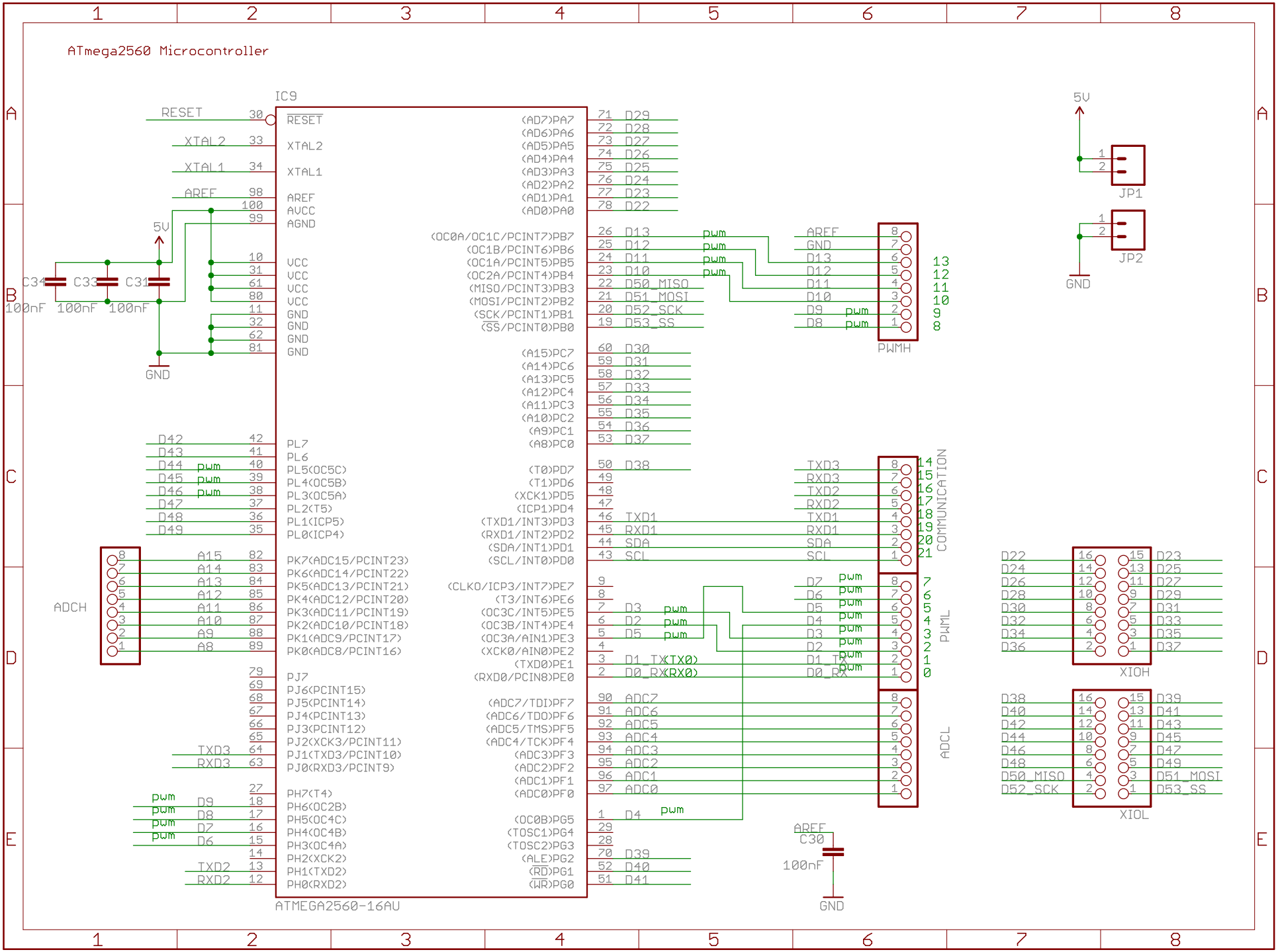
ATmega2560 Microcontroller