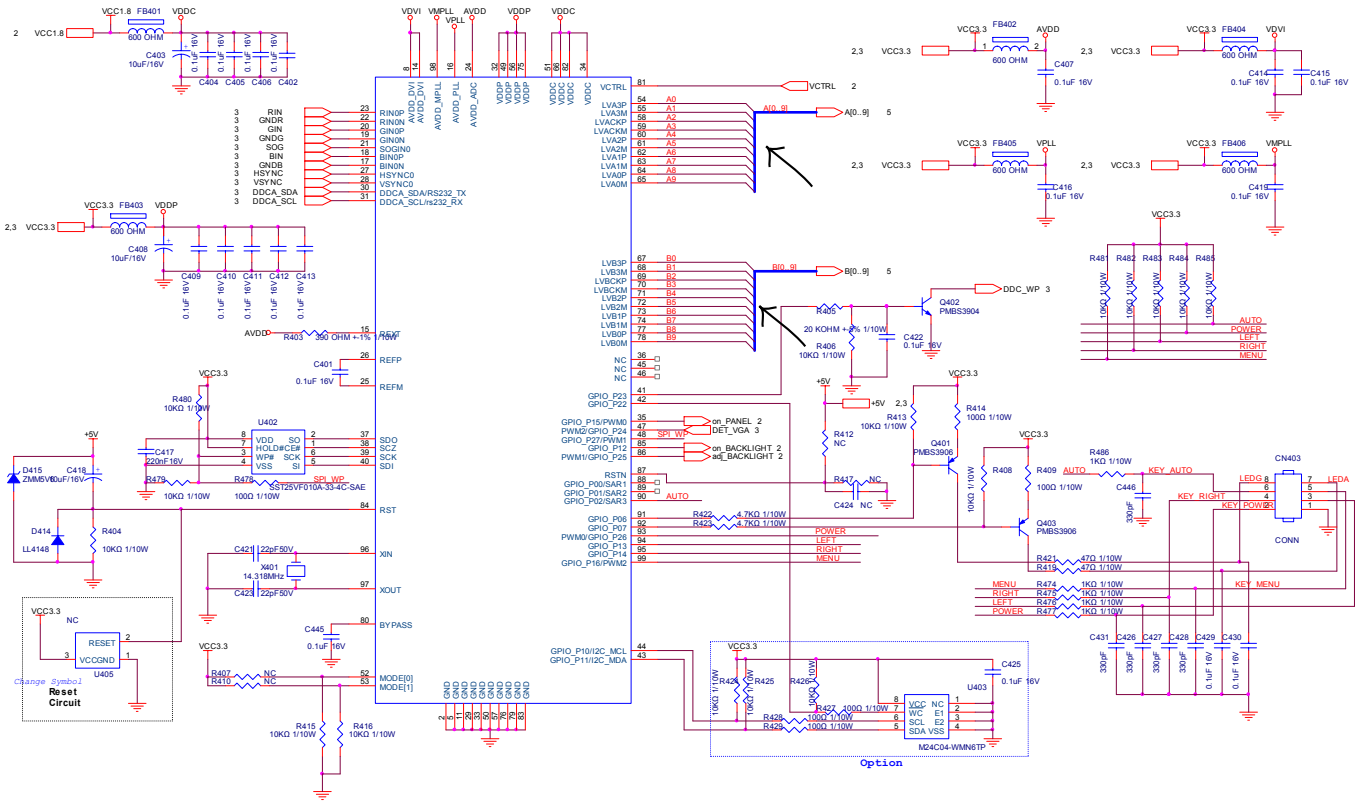
VCC1.8
FB401
VDDC
600 OHM
C403
10uF/16V
C404 C405 C406 C402
VDVI
VMPLL
VPLL
AVDD
VDDP
VCC3.3
FB402
FB404
FB405
FB406
C407
C411
C415
C416
C419
0.1uF 16V
VCTRL
A[0..9]
B[0..9]
DDC_WP
RIN
GNDR
GIN
GNDG
SOG
BIN
GNDB
HSYNC
VSYNC
DDCA_SDA
DDCA_SCL
RIN0P
RIN0N
GIN0P
GIN0N
SOGIN0
BIN0P
BIN0N
HSYNC0
VSYNC0
DDCA_SDA/RS232_TX
DDCA_SCL/rs232_RX
FB403
C408
10uF/16V
C409 C410 C411 C412 C413
R403 390 OHM +-1%
REXT
REFP
REFM
C401
0.1uF 16V
R480
10KΩ 1/10W
U402
SST25VF010A-33-4C-SAE
SDO
SCZ
SCK
SDI
RST
XIN
XOUT
BYPASS
MODE[0]
MODE[1]
C417
220nF16V
R479
10KΩ 1/10W
R478
100Ω 1/10W
SPI_WP
D415
ZMM5V6
C418
10uF/16V
D414
LL4148
R404
10KΩ 1/10W
C421
22pF50V
X401
14.318MHz
C423
22pF50V
C445
0.1uF 16V
R407
R410
NC
R415
10KΩ 1/10W
R416
10KΩ 1/10W
Change Symbol
Reset Circuit
RESET
VCCGND
U405
LVA3P
LVA3M
LVACKP
LVACKM
LVA2P
LVA2M
LVA1P
LVA1M
LVA0P
LVA0M
LVB3P
LVB3M
LVBCKP
LVBCKM
LVB2P
LVB2M
LVB1P
LVB1M
LVB0P
LVB0M
GPIO_P23
GPIO_P22
GPIO_P15/PWM0
PWM2/GPIO_P24
GPIO_P27/PWM1
GPIO_P12
PWM1/GPIO_P25
RSTN
GPIO_P00/SAR1
GPIO_P01/SAR2
GPIO_P02/SAR3
GPIO_P06
GPIO_P07
PWM0/GPIO_P26
GPIO_P13
GPIO_P14
GPIO_P16/PWM2
GPIO_P10/I2C_MCL
GPIO_P11/I2C_MDA
on_PANEL
DET_VGA
on_BACKLIGHT
ad_BACKLIGHT
AUTO
POWER
LEFT
RIGHT
MENU
R405
20 KOHM +-2% 1/10W
R406
10KΩ 1/10W
C422
0.1uF 16V
Q402
PMBS3904
R481 R482 R483 R484 R485
10KΩ 1/10W
R412
NC
R413
10KΩ 1/10W
R414
100Ω 1/10W
Q401
PMBS3906
R447
NC
C424 NC
R422
4.7KΩ 1/10W
R423
4.7KΩ 1/10W
R408
10KΩ 1/10W
R409
100Ω 1/10W
Q403
PMBS3906
R486
1KΩ 1/10W
C446
330uF
KEY_AUTO
KEY_RIGHT
KEY_POWER
KEY_MENU
CN403
CONN
LEDG
LEDA
R421
47Ω 1/10W
R419
47Ω 1/10W
R474
1KΩ 1/10W
R475
1KΩ 1/10W
R476
1KΩ 1/10W
R477
1KΩ 1/10W
C431 C426 C427 C428 C429 C430
330uF
0.1uF 16V
R424
10KΩ 1/10W
R425
10KΩ 1/10W
R426
10KΩ 1/10W
R427
100Ω 1/10W
R428
100Ω 1/10W
R429
100Ω 1/10W
C425
0.1uF 16V
U403
VCC NC
WC E1
SCL E2
SDA VSS
M24C04-WMN6TP
Option