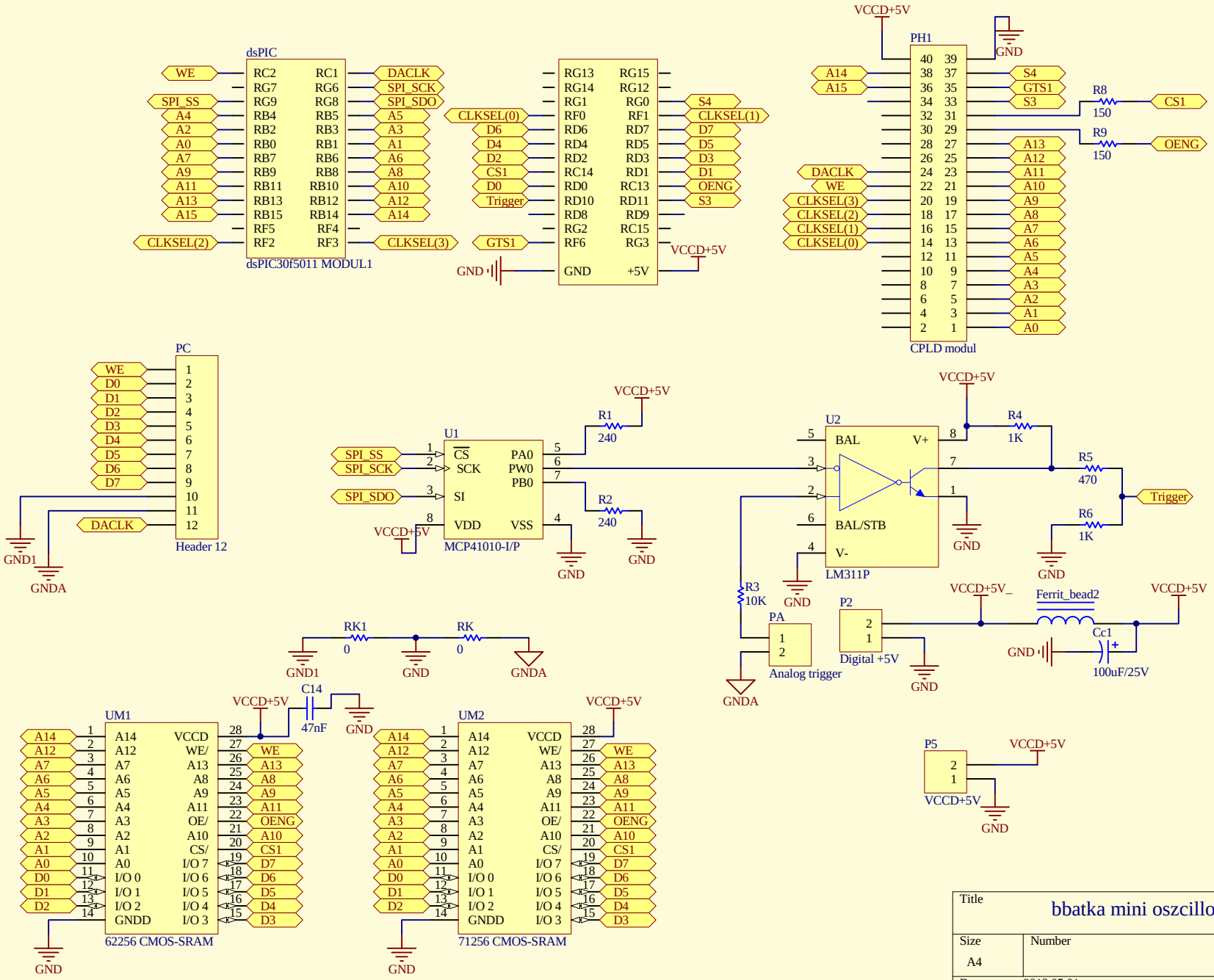

Title	bbatka mini oszcilloszkóp főpanel (digitális)	
Size A4	Number	Revision v4.0
Date: 2013.05.01.		Sheet of
File: D:\munka\..\Sheet1.SchDoc		Drawn By: bbatka