NMB-MAT

Minebea Motor Manufacturing Corporation

eMINEBEA.COM

PM42M-048

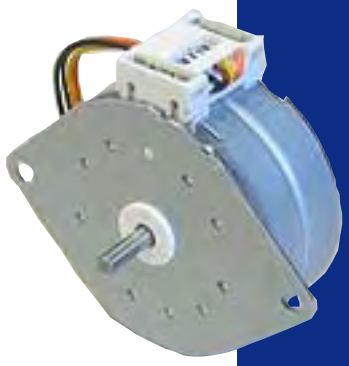

PM Motor

PM Type

Reference Characteristics

Motor Size	PM42M-048	
Number of Steps per Rotation	48(7.5°/Step)	
Drive Method	2-2 PHASE	
Drive Circuit	UNIPOLAR CONST. VOLT.	BIPOLAR CHOPPER
Drive Voltage	24[V]	24[V]
Current/Phase		500[mA]
Coil Resistance/Phase	80[Ω]	6[Ω]
Drive IC	2SC3346	UDN2916B-V
Magnet Material	Ferrite plastic magnet (MSPL) Polar anisotropy ferrite sintered magnet (MS50) Nd-Fe-B bonded magnet (MS70)	
Insulation Resistance	100M[Ω] MIN	
Dielectric Strength	AC 500[V] 1[min]	
Class of Insulation	CLASS E	
Operating Temp.	-10[°C] ~ 50[°C]	
Storage Temp.	-30[°C] ~ 80[°C]	
Operating Hum.	20[%] RH ~ 90[%] RH	

Applications

OA Equipment : Printers / Scanners

Industrial equipment : Flow control valves

Toys : Slot machines

Home automation appliances : Sewing machines

Torque Characteristics

PM42M-048 UNI-CONST. V (at 24[V],80[Ω])

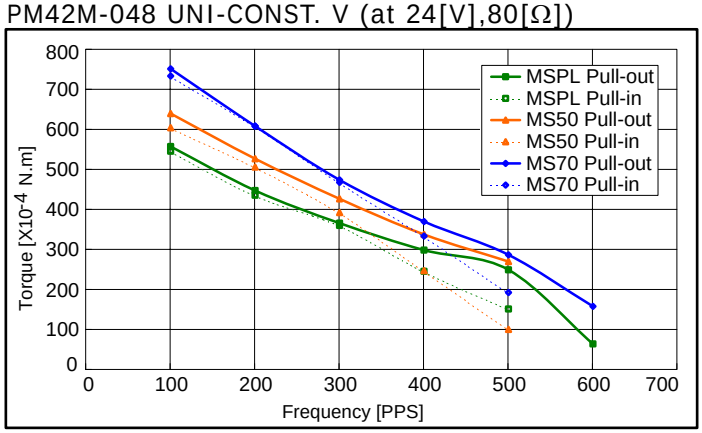

PM42M-048 BI-CHOPPER (at 24[V],6[Ω],500[mA])

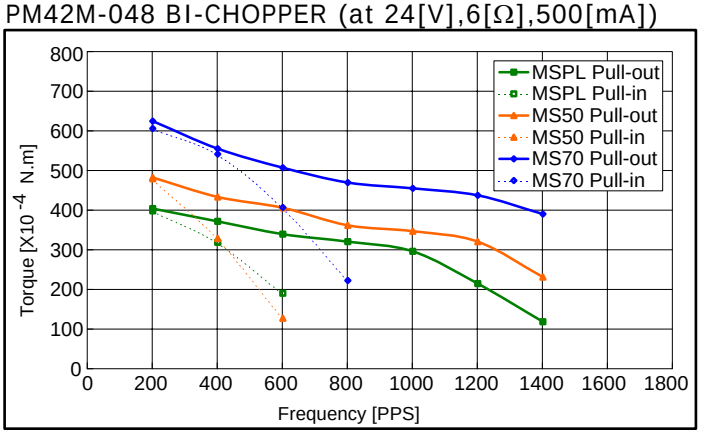

These torque values are reference only. Heat radiation conditions and temperature rise effect by duty are different on each equipment, therefore please select motors after considering the heat conditions in the actual equipment.

Dimensions

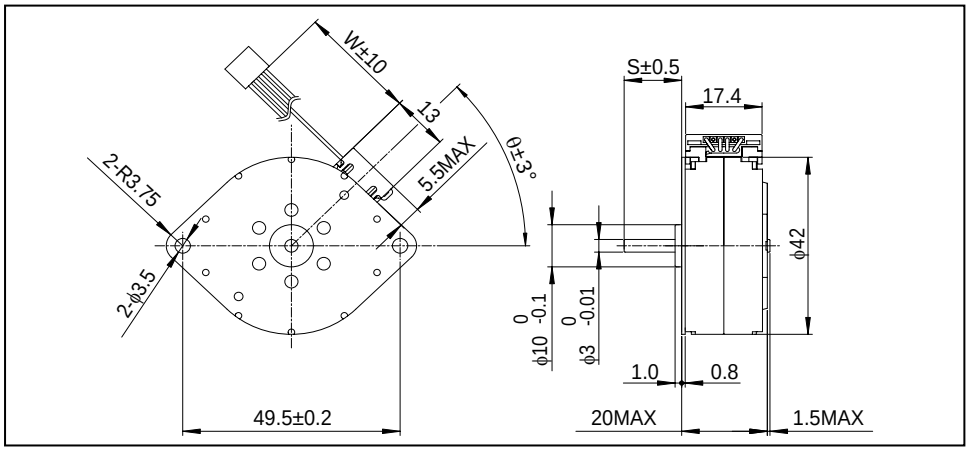

If you would like to know this Dimensions(D,S,W,θ), Please see Standerd Dimensions in our Home Page.

Copyright 2004, Minebea Co., Ltd.