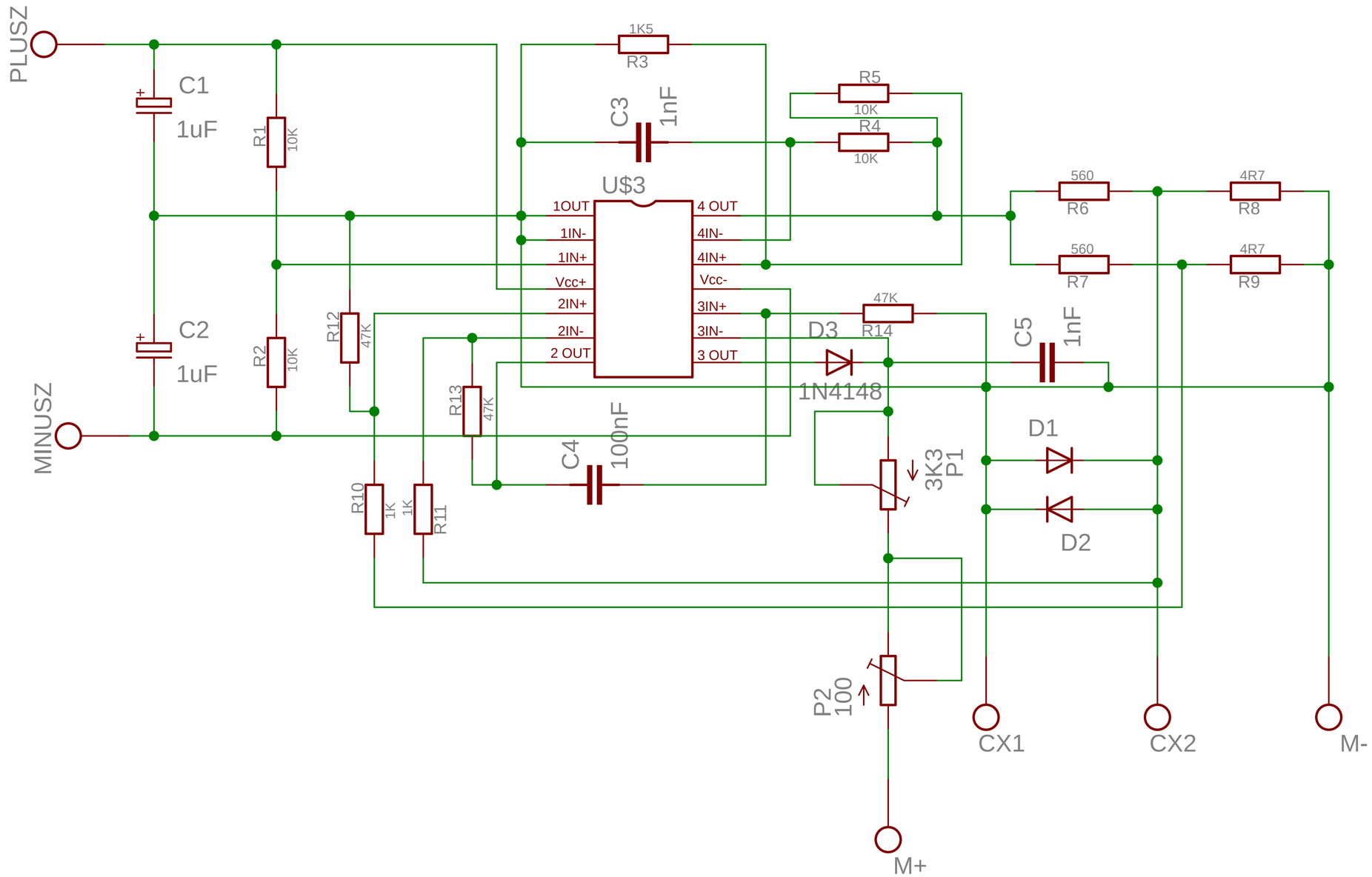
PLUSZ
MINUSZ
C1
1uF
C2
1uF
R1
10K
R2
10K
R12
47K
R13
47K
R10
1K
R11
1K
R3
1K5
C3
1nF
C4
100nF
U$3
1OUT
1IN-
1IN+
Vcc+
2IN+
2IN-
2 OUT
4 OUT
4IN-
4IN+
Vcc-
3IN+
3IN-
3 OUT
R5
10K
R4
10K
R6
560
R7
560
R8
4R7
R9
4R7
R14
47K
D3
1N4148
C5
1nF
D1
D2
P1
3K3
P2
100
CX1
CX2
M-
M+