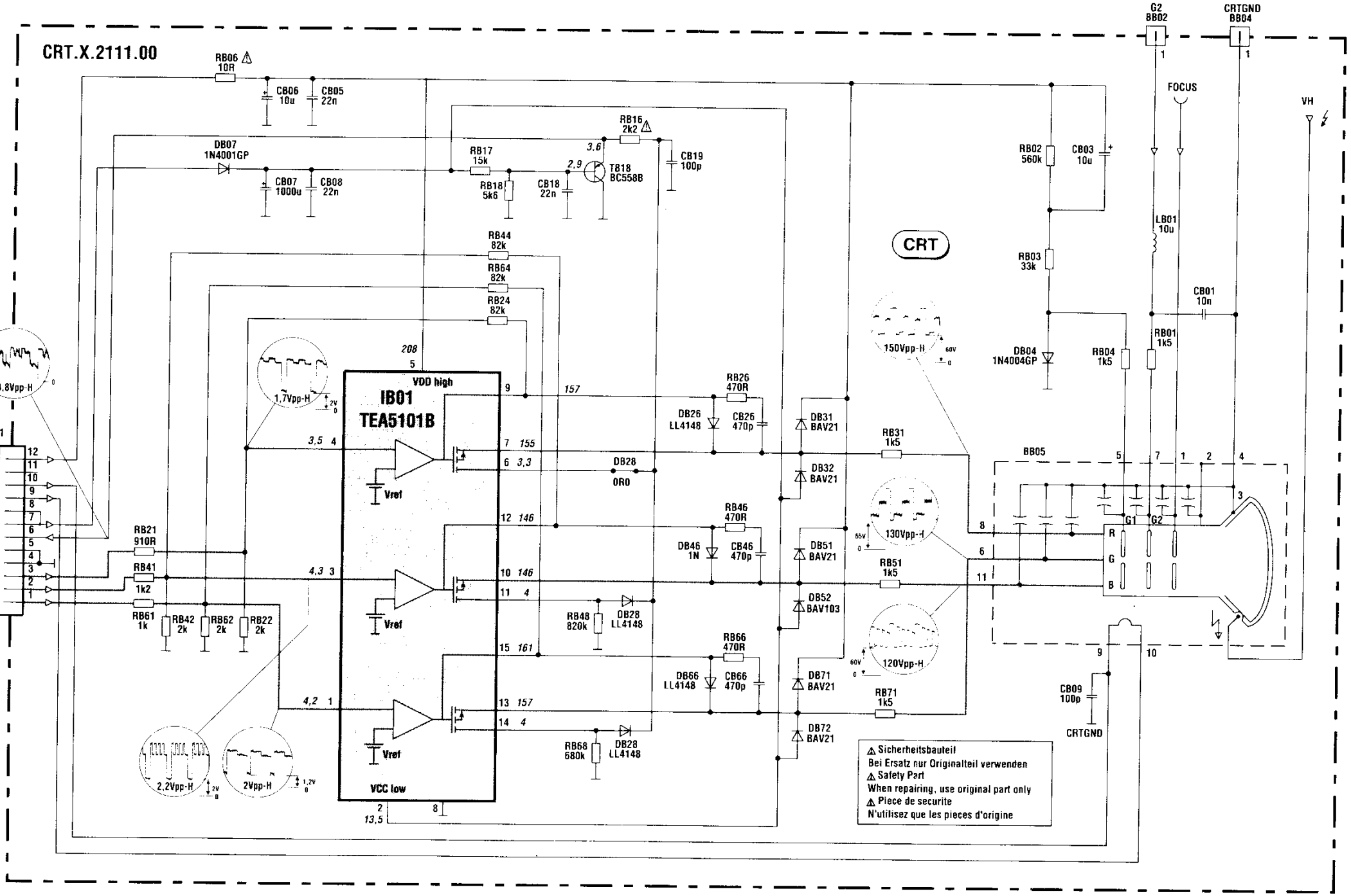

TDA9811 BLOCK DIAGRAM
MULTISTANDARD VIF - PLL WITH QSS-IF AND AM DEMODULATOR

MSP3400 / MSP3410 BLOCK DIAGRAM
SOUNDPROCESSOR