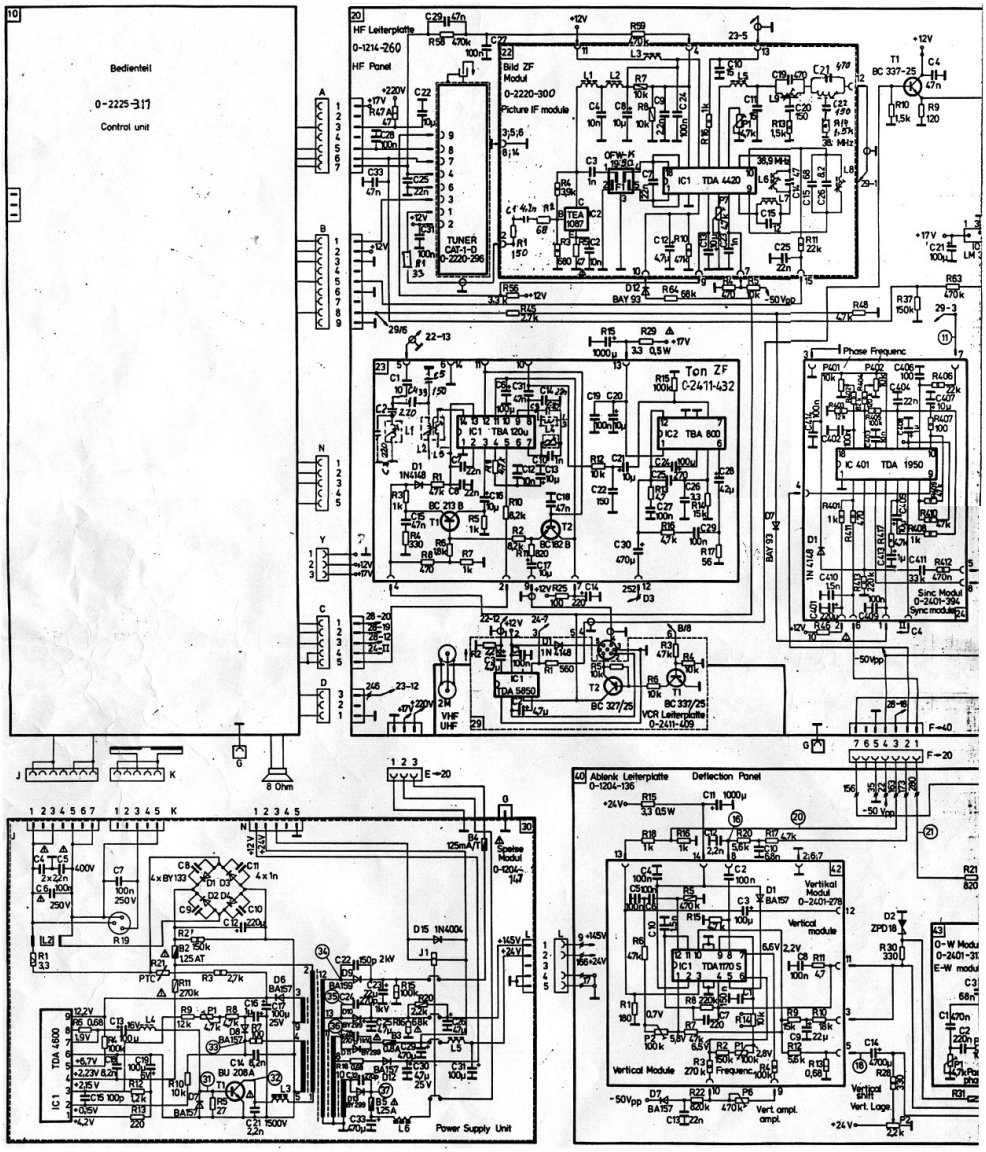
Bedienteil
0-2225-317
Control unit
HF Leiterplatte
0-1214-260
HF Panel
Bild ZF Modul
0-2220-300
Picture IF module
TUNER CXT-1-D 0-2220-296
IC1 TDA 4420
IC1 TDA 120u
IC2 TBA 800
Ton ZF 0-2411-432
IC 401 TDA 1950
Phase Frequenc
Sync Modul 0-2401-394
Sync module
VCR Leiterplatte 0-2411-409
VHF UHF
8 Ohm
Speise Modul 0-2204-147
Power Supply Unit
Ablenk Leiterplatte 0-1204-136
Deflection Panel
Vertical Modul 0-2401-278
Vertical module
Vertical Module
Vert. ampl.
Vert. Lage
Vertical shift