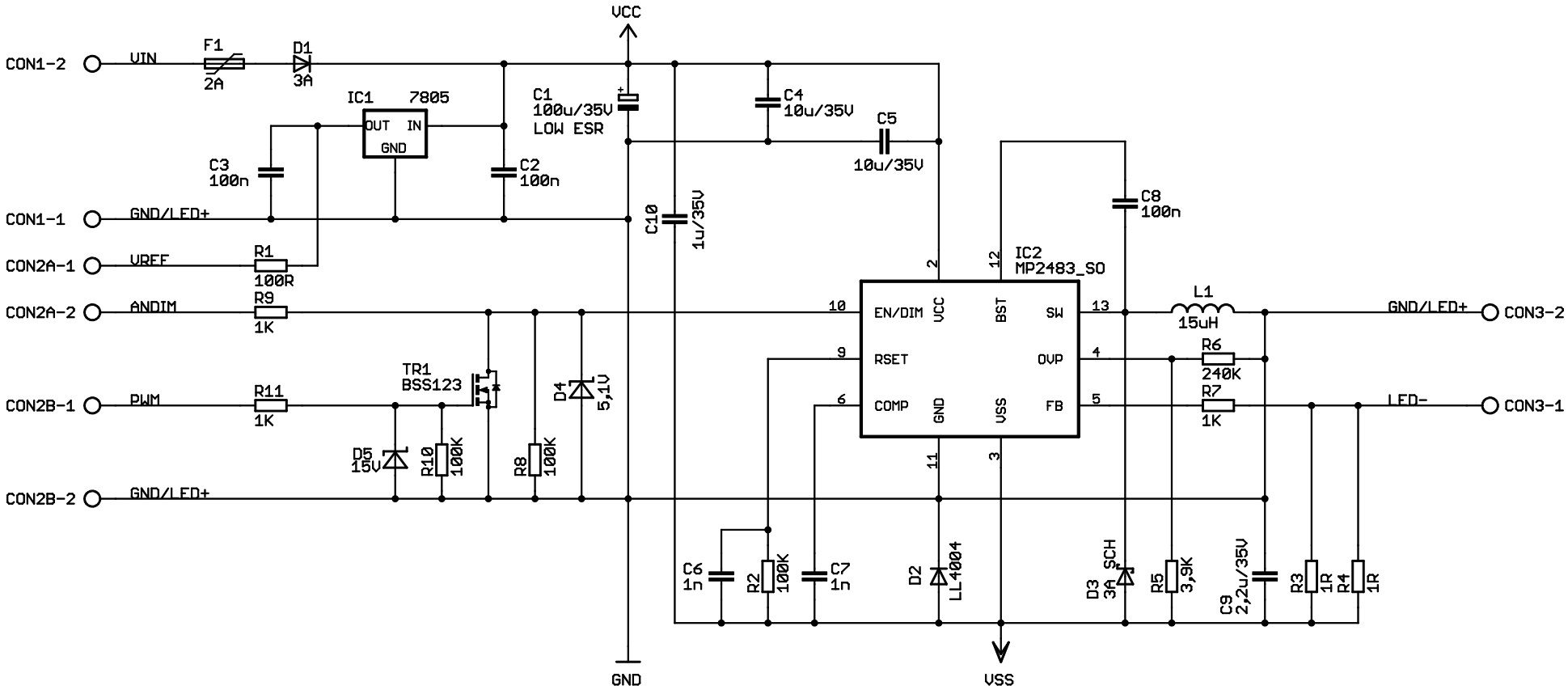

BOX

TITLE: LED_meghajto

Document Number:

REV:

Date: 2015.01.11 21:46:37

Sheet: 1/1