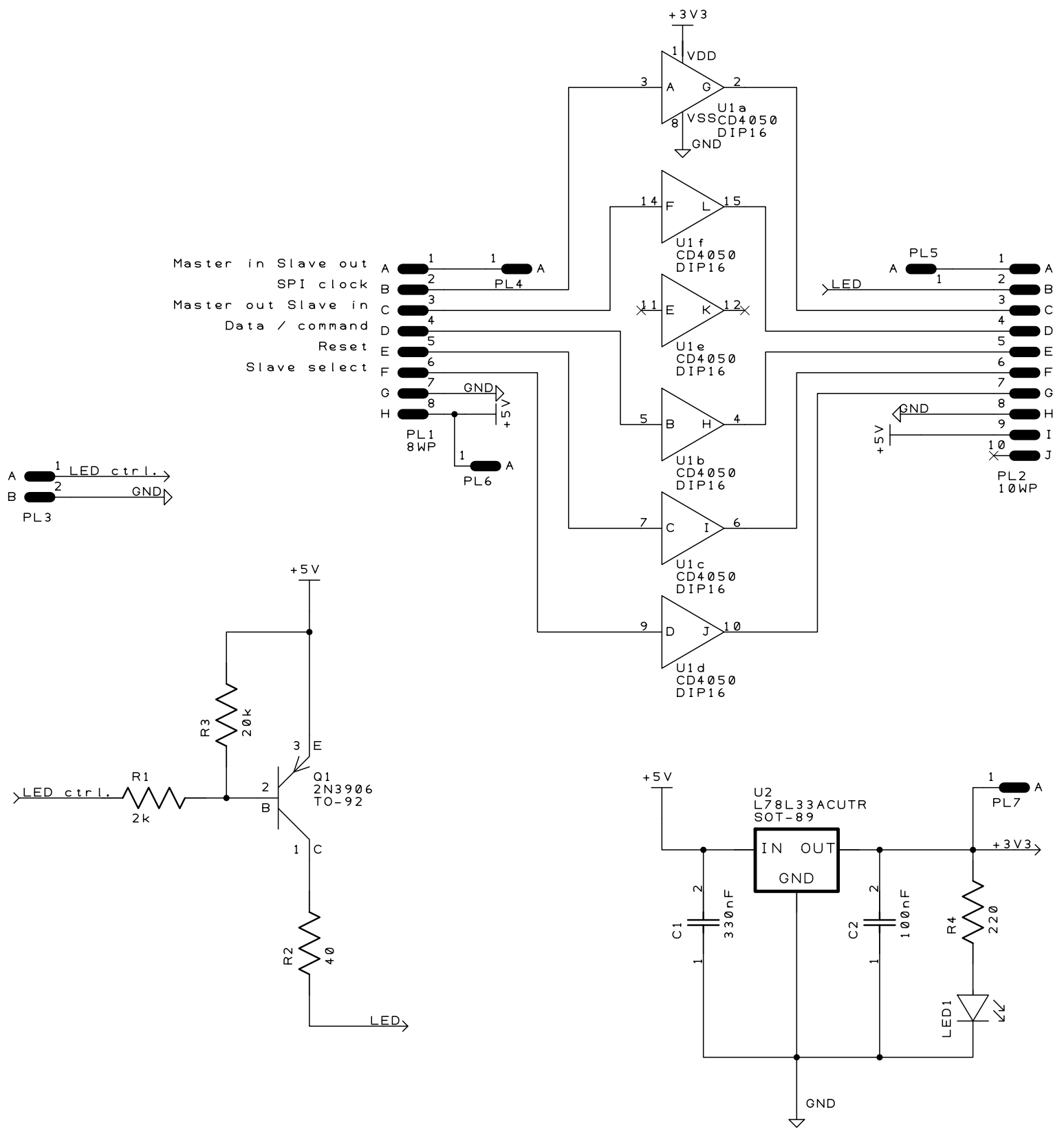
+3V3
VDD
VSS
GND
U1a
CD4050
DIP16
U1f
CD4050
DIP16
U1e
CD4050
DIP16
U1b
CD4050
DIP16
U1c
CD4050
DIP16
U1d
CD4050
DIP16
Master in Slave out
SPI clock
Master out Slave in
Data / command
Reset
Slave select
PL4
PL1
8WP
PL6
PL5
LED
PL2
10WP
LED ctrl.
PL3
+5V
R3
20k
R1
2k
Q1
2N3906
TO-92
R2
40
U2
L78L33ACUTR
SOT-89
IN OUT
C1
330nF
C2
100nF
R4
220
LED1
PL7