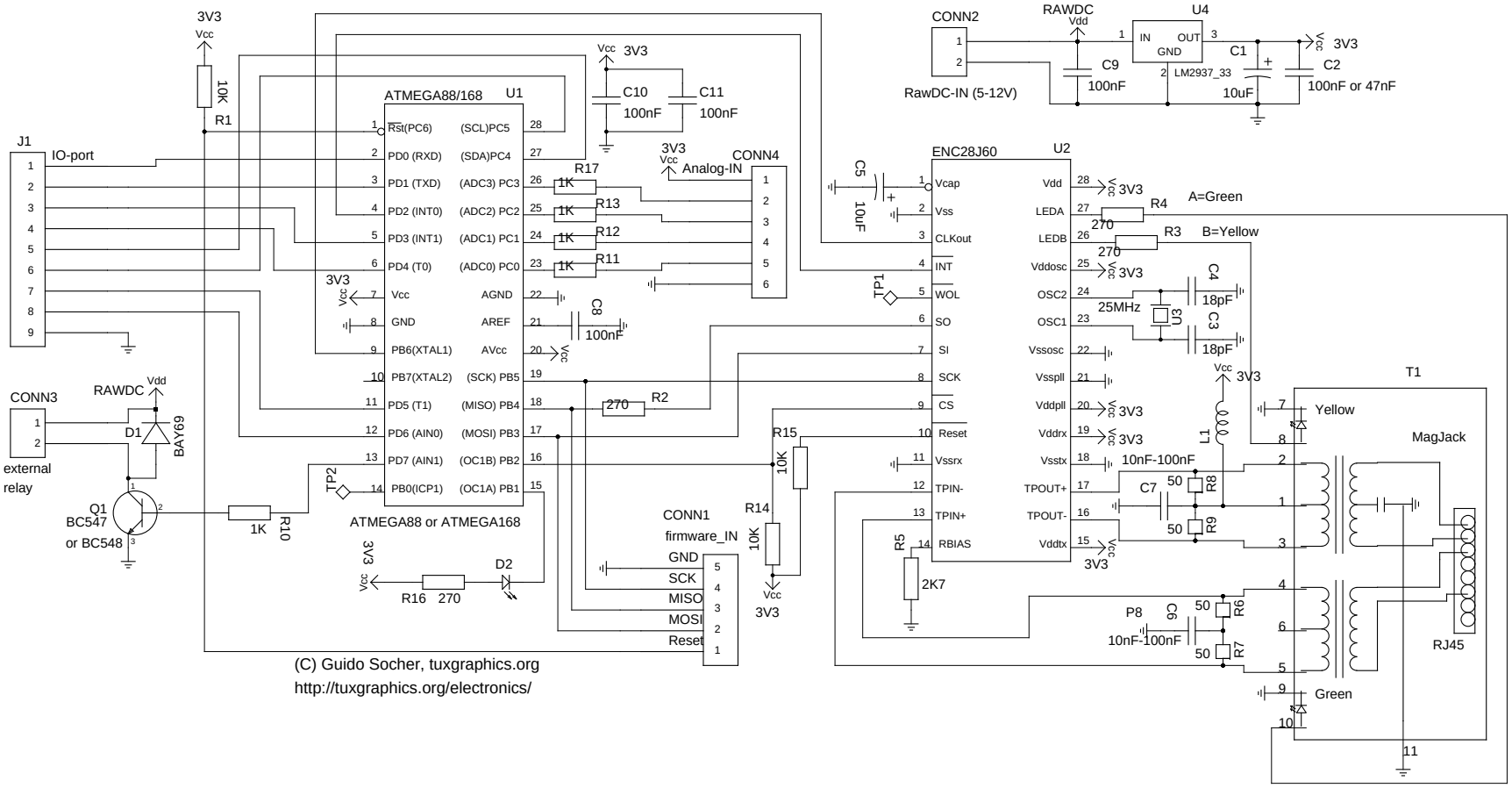Ethernet remote device controller/sensor, version 2007/1