COMPONENT LOCATIONS XY-BOARD HM 203-4

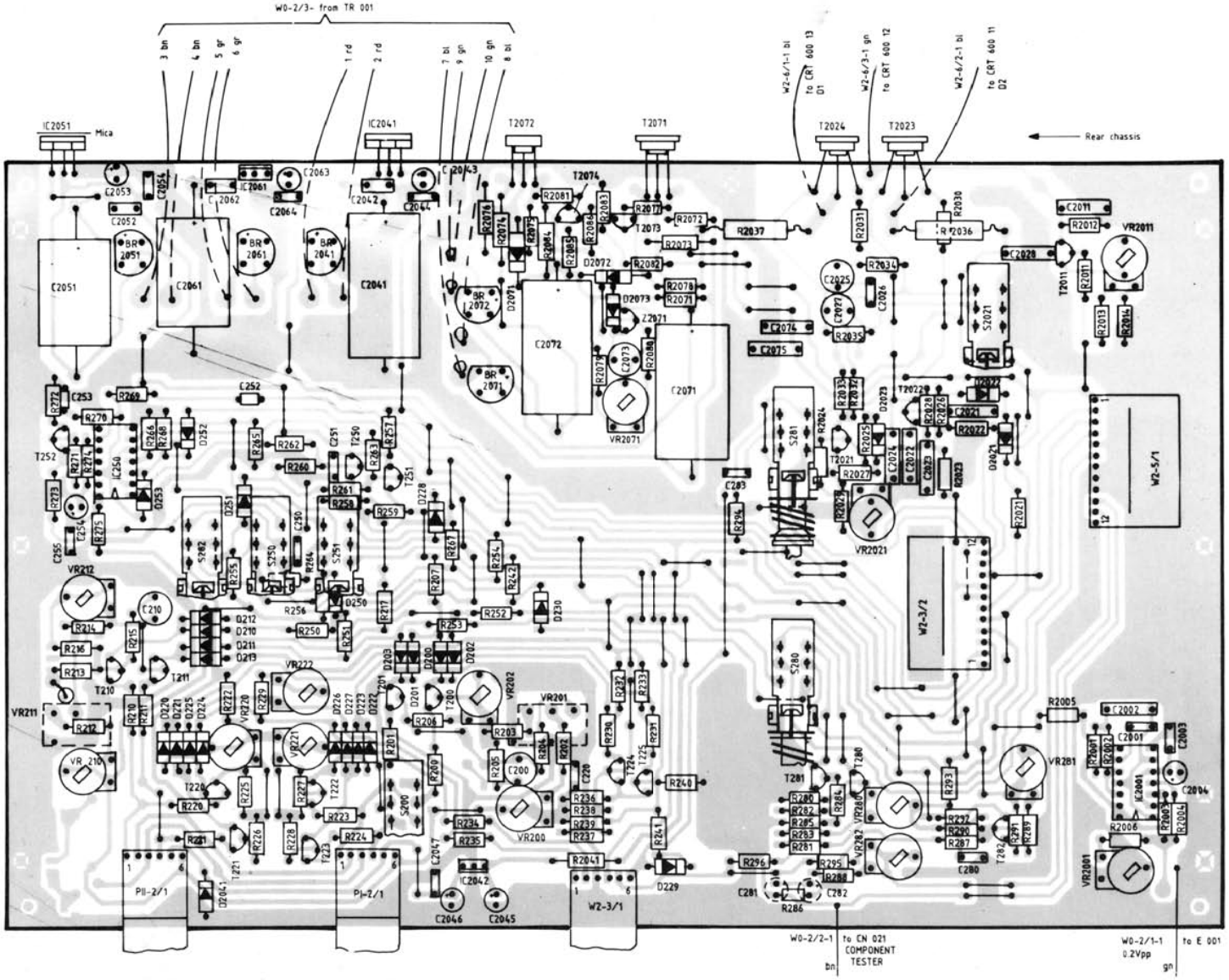

R212 R272 R213 R273 R214 R274 R216 R275 R270 VR210 R271 VR211 VR212	R210 R211 R215 R266 R268 R269	R220 VR220 R221 R222 R225 R226 R229 R255 R265	R201 R256 R264 R217 R257 VR221 R223 R258 VR222 R224 R259 R227 R260 R228 R261 R250 R262 R251 R263	R200 R235 R2076 R202 R242 R2081 R203 R252 R2084 R204 R253 R2085 R205 R254 VR200 R206 R267 VR201 R207 R2074 VR202 R234 R2075	R230 R240 R2079 R231 R241 R2080 R232 R2041 R2082 R233 R2071 R2083 R236 R2072 R2086 R237 R2073 VR2071 R238 R2077 R239 R2078	R280 R294 R2032 R281 R295 R2033 R282 R296 R2034 R283 R2024 R2035 R284 R2025 R2037 R285 R2027 VR280 R286 R2029 VR282 R288 R2031 VR2021	R287 R2033 R289 R2026 R290 R2028 R291 R2030 R292 R2036 R293 VR281 R2021 R2022	R2001 R2013 R2002 R2014 R2003 VR2001 R2004 VR2011 R2005 R2006 R2011 R2012

C210 C255 C2053 C2062 C253 C2051 C2054 C254 C2052 C2061	C250 C2041 C2044 C2063 C251 C2042 C2046 C2064 C252 C2043 C2047	C200 C2045 C2072	C2071 C2073	C281 C2022 C2025 C2074 C282 C2023 C2026 C2075 C283 C2024 C2027	C280 C2021 C2028	C2001 C2011 C2002 C2003

BR2051 D213 D225 IC250 T220 D210 D220 D252 IC2051 T252 D211 D221 D253 T210 D212 D224 D2041 T211	BR2041 D222 D250 T201 T223 BR2061 D223 D251 T202 T250 D200 D226 IC2041 T221 T251 IC2061 T222 D203 D228	BR2071 IC2042 BR2072 T2072 D230 T2074 D2071	D229 T225 D2072 T271 D2073 T273 T224 Z2071	D2023 T2022 T280 T2023 T281 T2024 T2021	D2021 D2022 T282	IC2001 T2011
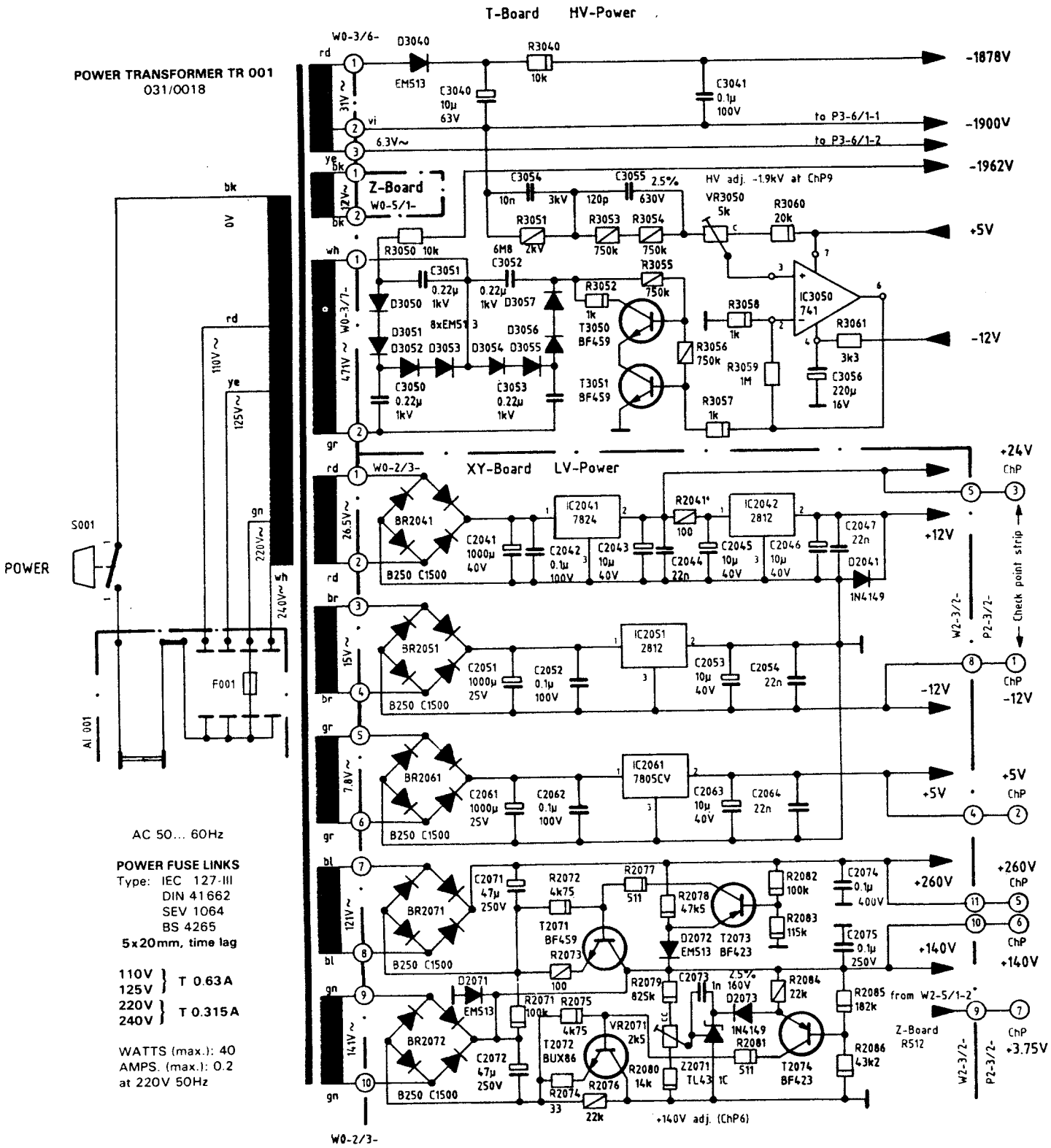
LV + HV POWER SUPPLY HM 203-4