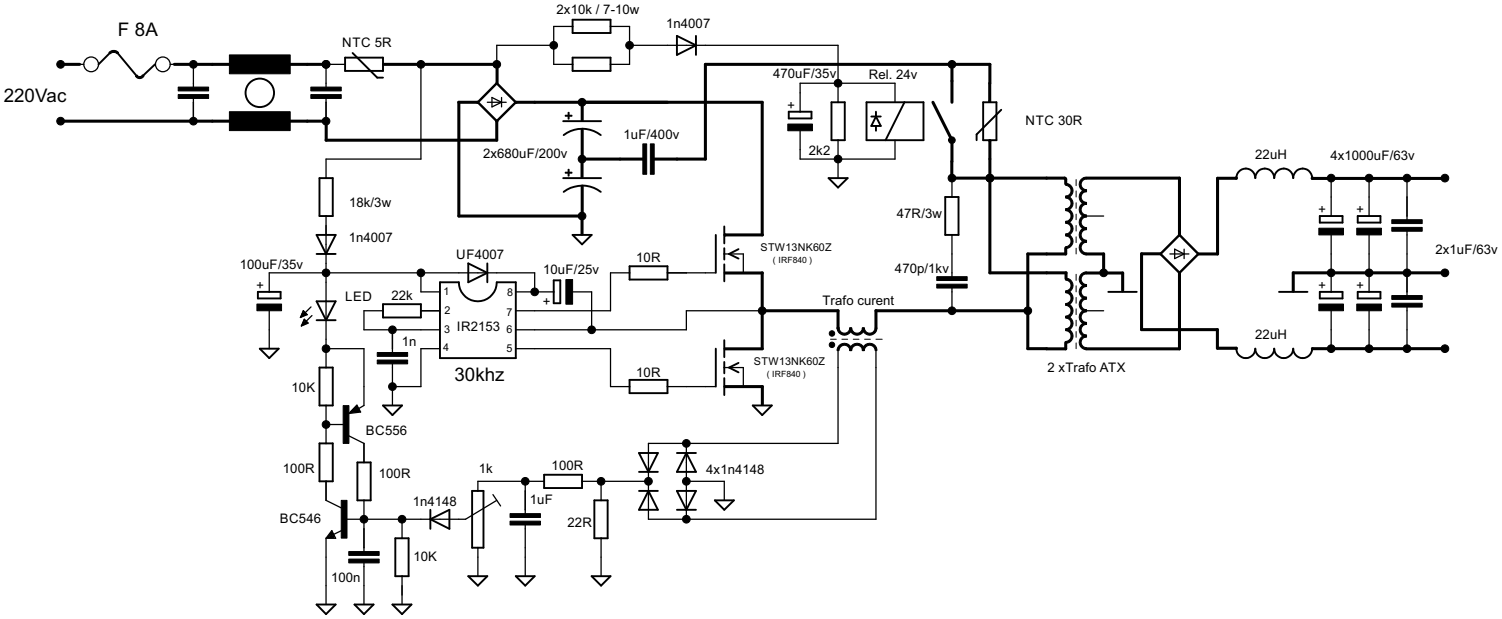
F 8A
220Vac
NTC 5R
2x10k / 7-10w
1n4007
2x680uF/200v
1uF/400v
470uF/35v
Rel. 24v
2k2
NTC 30R
18k/3w
1n4007
100uF/35v
UF4007
10uF/25v
10R
STW13NK60Z
(IRF840)
LED
22k
IR2153
1n
30khz
Trafo curent
47R/3w
470p/1kv
2 xTrafo ATX
22uH
4x1000uF/63v
2x1uF/63v
10K
BC556
100R
100R
BC546
1n4148
1k
1uF
100R
22R
4x1n4148
10K
100n