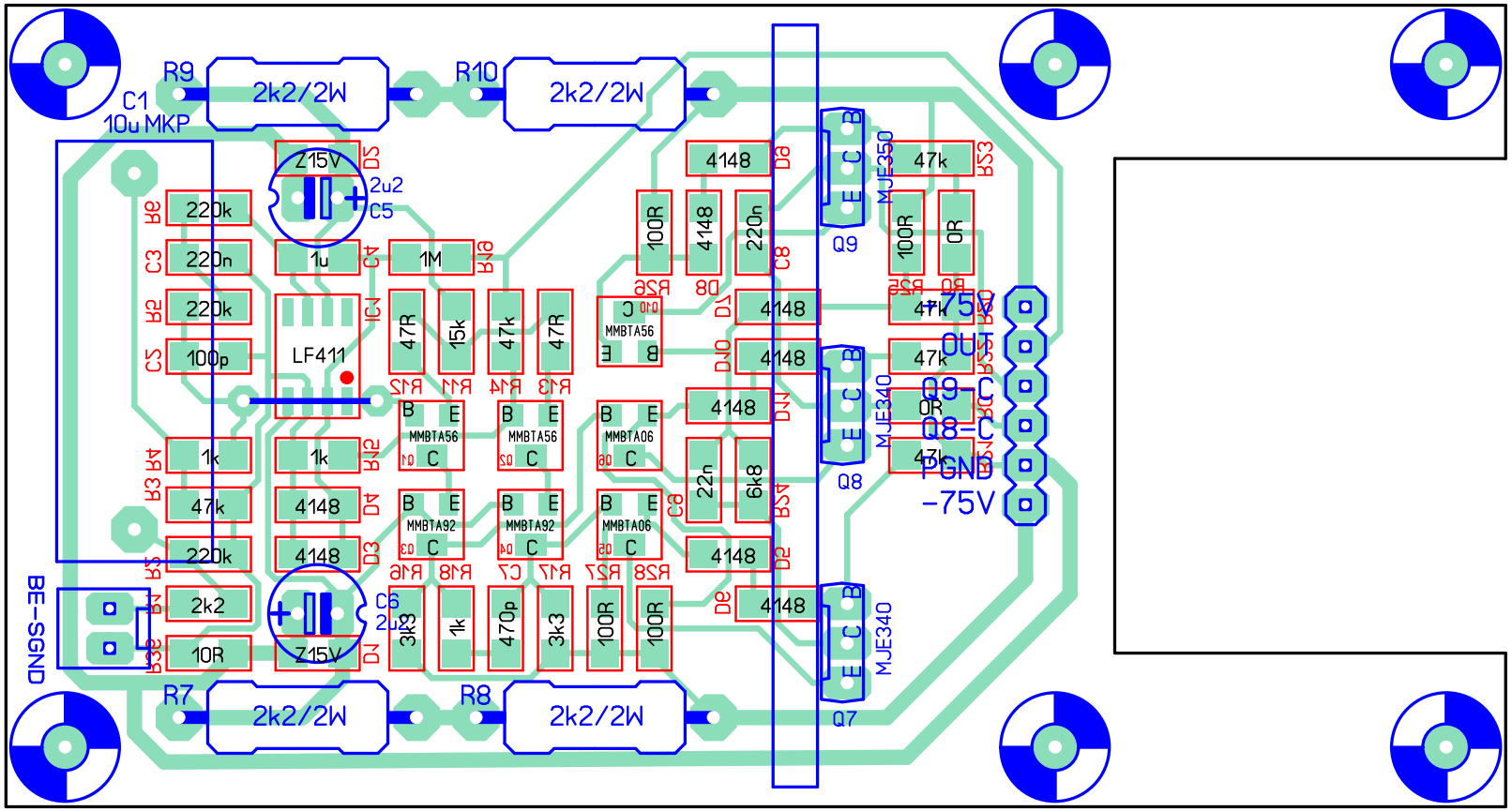
R9
2k2/2W
R10
2k2/2W
C1
10u MKP
Z15V
D5
2u2
C5
220k
R6
220n
C3
220k
R2
100p
C5
LF411
1u
C4
1M
R10
47R
15k
47k
47R
MMBTA56
1k
R4
1k
R12
47k
R3
4148
D4
220k
R5
4148
D3
2k2
R1
10R
R3
C6
2u2
Z15V
D1
3k3
1k
470p
3k3
100R
100R
4148
D6
100R
4148
220n
C8
4148
D1
4148
D10
4148
D11
22n
6k8
R5
4148
D2
4148
D9
MJE350
Q9
MJE340
Q8
MJE340
Q7
47k
R3
100R
0R
47k
47k
0R
47k
+75V
OUT
Q9-C
Q8-C
PGND
-75V
BE-SGND
R7
2k2/2W
R8
2k2/2W