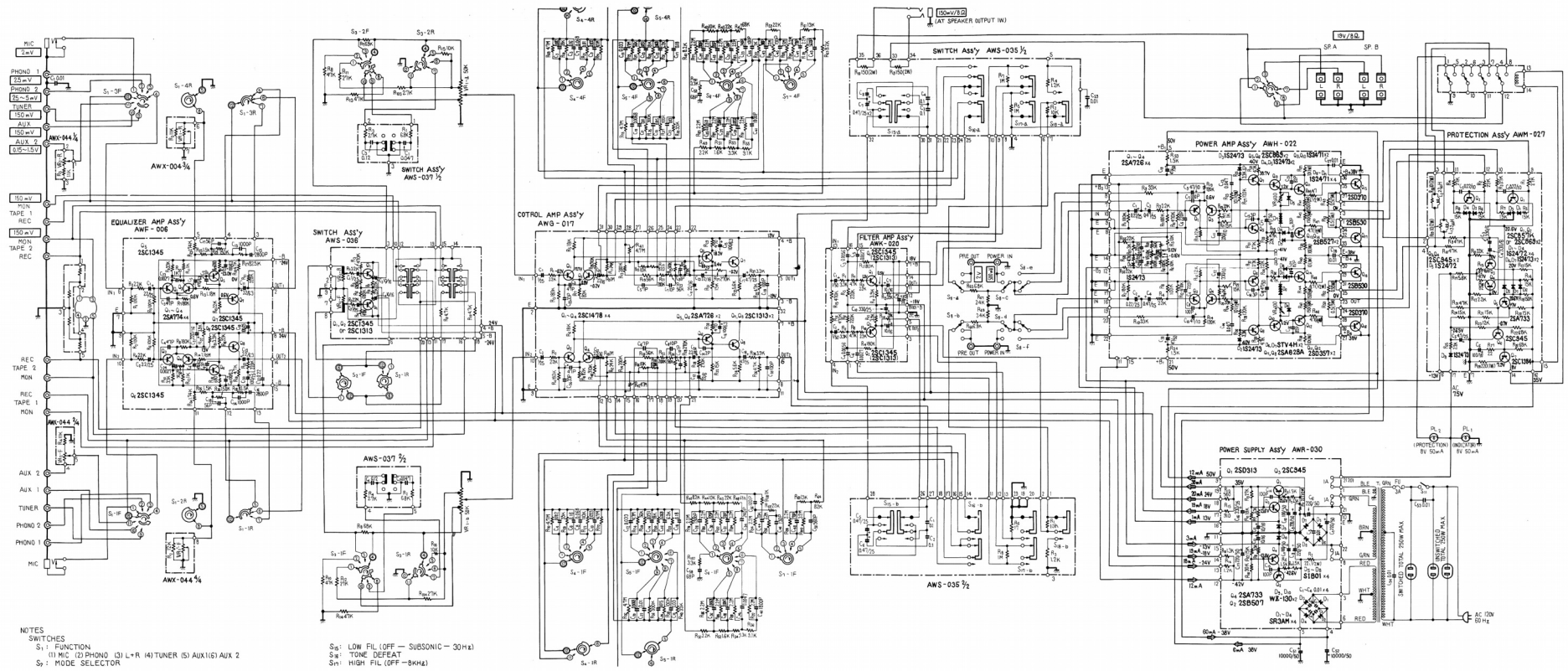

NOTES
SWITCHES
S_1: FUNCTION
(1) MIC (2) PHONO (3) L+R (4) TUNER (5) AUX1 (6) AUX 2
S_2: MODE SELECTOR

S_{1G}: LOW FIL (OFF — SUBSONIC — 30Hz)
S_{2G}: TONE DEFEAT
S_{1H}: HIGH FIL (OFF — 8KHz)