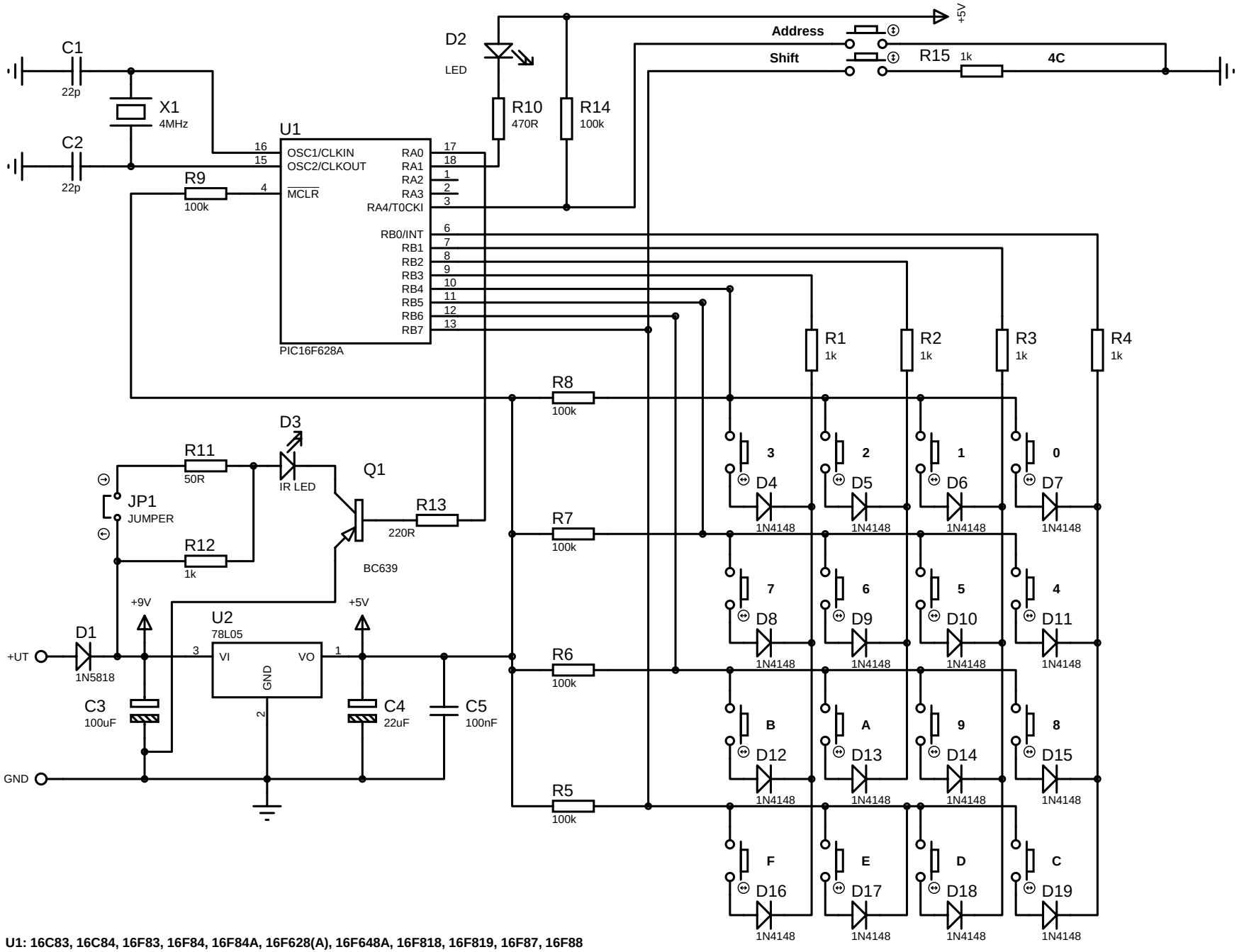

U1: 16C83, 16C84, 16F83, 16F84, 16F84A, 16F628(A), 16F648A, 16F818, 16F819, 16F87, 16F88