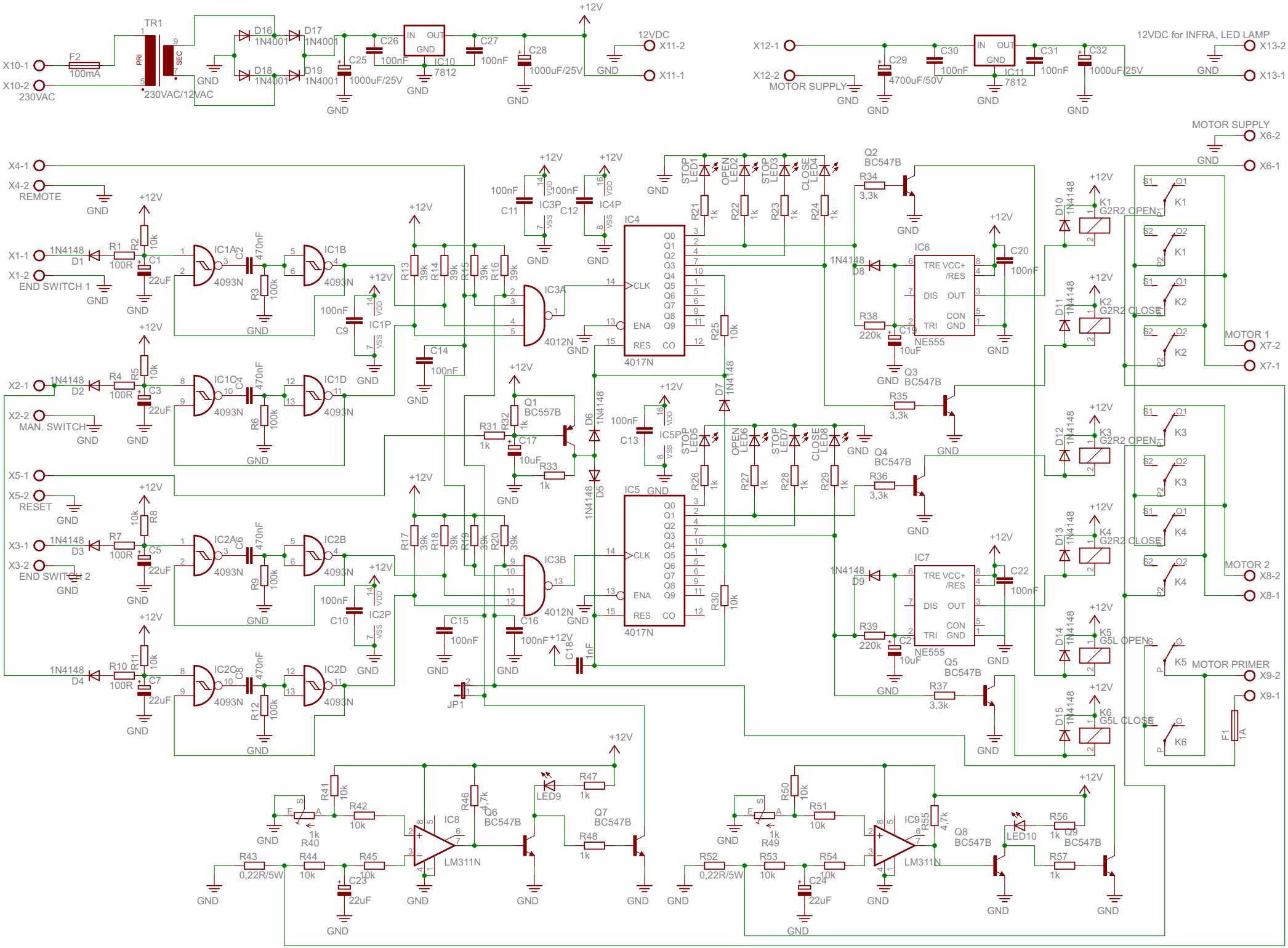
TR1
PRI
SEC
X10-1
X10-2
230VAC
F2
100mA
230VAC/12VAC
D16 1N4001
D17 1N4001
D18 1N4001
D19 1N4001
C25 1000uF/25V
C26 100nF
IC10 7812
IN OUT GND
C27 100nF
C28 1000uF/25V
+12V
12VDC
X11-2
X11-1
GND
X12-1
X12-2
MOTOR SUPPLY
C29 4700uF/50V
C30 100nF
IC11 7812
C31 100nF
C32 1000uF/25V
12VDC for INFRA, LED LAMP
X13-2
X13-1
MOTOR SUPPLY
X6-2
X6-1
X4-1
X4-2
REMOTE
X1-1
X1-2
END SWITCH 1
X2-1
X2-2
MAN. SWITCH
X5-1
X5-2
RESET
X3-1
X3-2
END SWITCH 2
1N4148
R1 100R
R2 10k
C1 22uF
IC1A 4093N
C2 470nF
R3 100k
IC1B 4093N
R4 100R
R5 10k
C3 22uF
IC1C 4093N
C4 470nF
R6 100k
IC1D 4093N
R7 100R
R8 10k
C5 22uF
IC2A 4093N
C6 470nF
R9 100k
IC2B 4093N
R10 100R
R11 10k
C7 22uF
IC2C 4093N
C8 470nF
R12 100k
IC2D 4093N
IC1P
C9 100nF
IC2P
C10 100nF
C11 100nF
IC3P
C12 100nF
IC4P
C13 100nF
IC5P
C14 100nF
C15 100nF
C16 100nF
C17 10uF
C18 1nF
R13 39k
R14 39k
R15 39k
R16 39k
R17 39k
R18 39k
R19 39k
R20 39k
R21 1k
R22 1k
R23 1k
R24 1k
R25 10k
R26 1k
R27 1k
R28 1k
R29 1k
R30 10k
R31 1k
R32 1k
R33 1k
R34 3,3k
R35 3,3k
R36 3,3k
R37 3,3k
R38 220k
R39 220k
IC3A 4012N
IC3B 4012N
IC4 4017N
IC5 4017N
CLK
ENA
RES
CO
Q0 Q1 Q2 Q3 Q4 Q5 Q6 Q7 Q8 Q9
Q1 BC557B
Q2 BC547B
Q3 BC547B
Q4 BC547B
Q5 BC547B
D5 1N4148
D6 1N4148
D7 1N4148
D8 1N4148
D9 1N4148
D10 1N4148
D11 1N4148
D12 1N4148
D13 1N4148
D14 1N4148
D15 1N4148
STOP LED1
OPEN LED2
STOP LED3
CLOSE LED4
STOP LED5
OPEN LED6
STOP LED7
CLOSE LED8
IC6 NE555
IC7 NE555
TRE VCC+ /RES
DIS OUT
CON GND
TRI
C19 10uF
C20 100nF
C21 10uF
C22 100nF
K1 G2R2 OPEN
K2 G2R2 CLOSE
K3 G2R2 OPEN
K4 G2R2 CLOSE
K5 G5L OPEN
K6 G5L CLOSE
MOTOR 1
X7-2
X7-1
MOTOR 2
X8-2
X8-1
MOTOR PRIMER
X9-2
X9-1
F1 1A
JP1
R40 1k
R41 10k
R42 10k
R43 0,22R/5W
R44 10k
R45 10k
C23 22uF
IC8 LM311N
R46 4,7k
Q6 BC547B
LED9
R47 1k
Q7 BC547B
R48 1k
R49 1k
R50 10k
R51 10k
R52 0,22R/5W
R53 10k
R54 10k
C24 22uF
IC9 LM311N
R55 4,7k
Q8 BC547B
LED10
R56 1k
Q9 BC547B
R57 1k