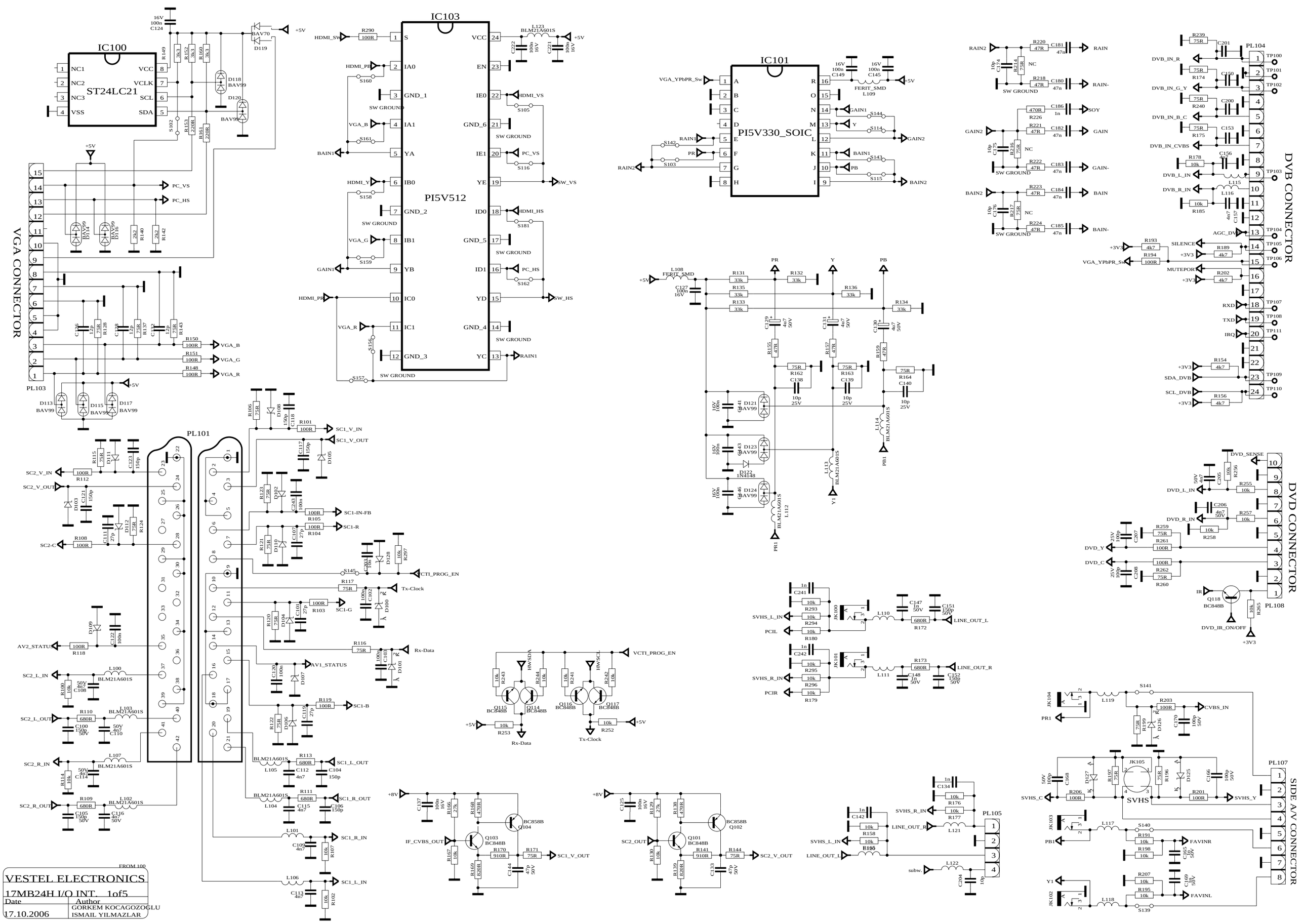
IC100
ST24LC21
IC103
PI5V512
IC101
PI5V330_SOIC
VGA CONNECTOR
DVB CONNECTOR
DVD CONNECTOR
SIDE A/V CONNECTOR
PL101
PL103
PL104
PL105
PL107
PL108
VESTEL ELECTRONICS
17MB24H I/O INT. 1of5
Date
17.10.2006
Author
GORKEM KOCAGOZOGLU
ISMAIL YILMAZLAR

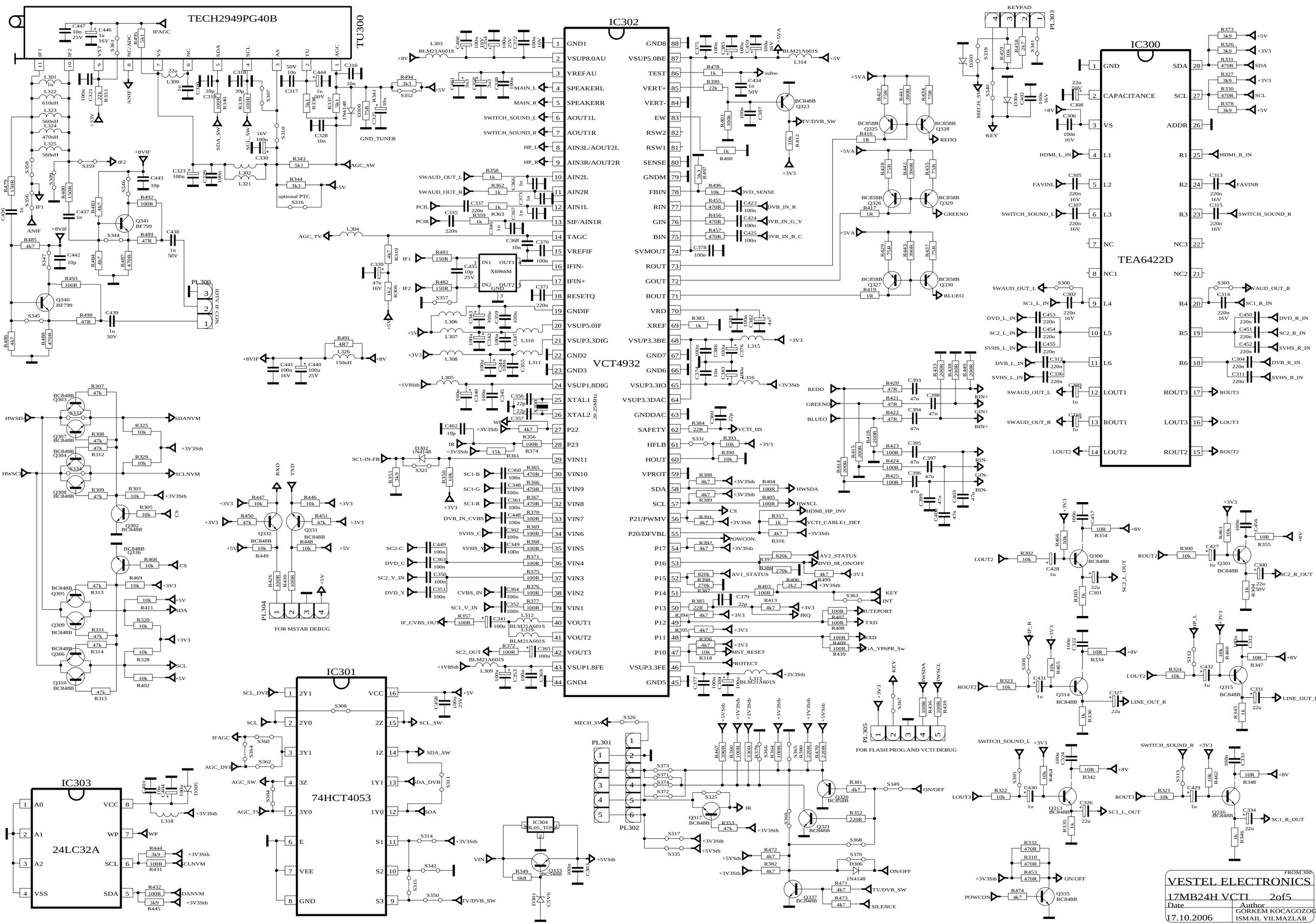
TECH2949PG40B
TU300
IC302
VCT4932
IC300
TEA6422D
IC301
74HCT4053
IC303
24LC32A
X6966M
PL300
IDTV IF CON.
PL301
PL302
PL303
KEYPAD
PL304
FOR MSTAR DEBUG
PL305
FOR FLASH PROG.AND VCTI DEBUG
GND_TUNER
AGC_SW
AGC_TV
SDA_SW
SCL_SW
SDANVM
SCLNVM
HWSDA
HWSCL
VCTI_HS
VCTI_CABLE1_DET
HDMI_HP_INV
AV2_STATUS
DVD_IR_ON/OFF
AV1_STATUS
POWCON.
PROTECT
MST_RESET
IRQ
RXD
TXD
TV/DVB_SW
ON/OFF
SILENCE
IR
WP
CS
SCL
SDA
VESTEL ELECTRONICS
17MB24H VCTI 2of5
Date
17.10.2006
Author
GORKEM KOCAGOZOG
ISMAIL YILMAZLAR

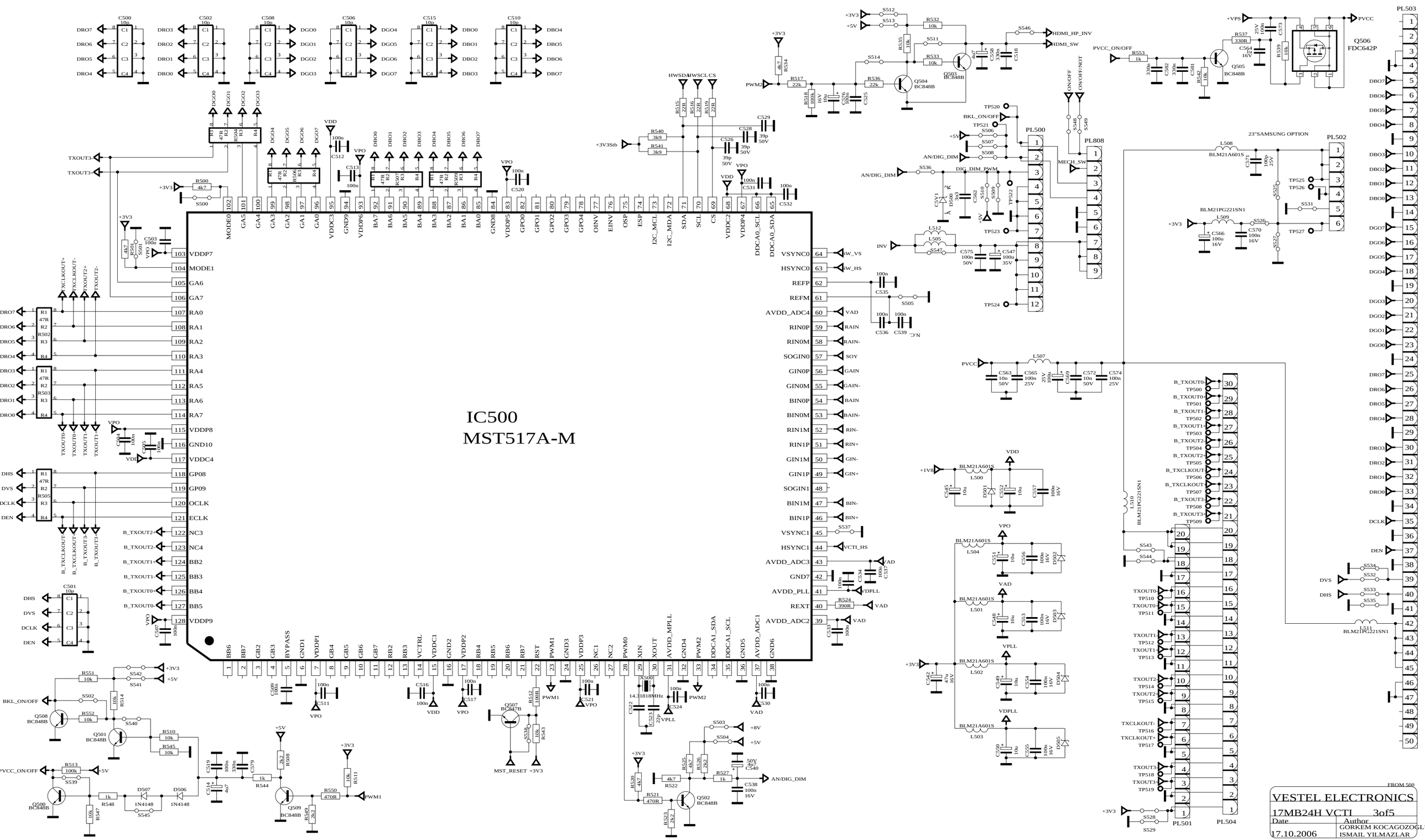
IC500
MST517A-M
VESTEL ELECTRONICS
17MB24H VCTI 3of5
Date
17.10.2006
Author
GORKEM KOCAGOZOGLU
ISMAIL YILMAZLAR
FROM 500
PL500
PL501
PL502
PL503
PL504
PL808
Q506
FDC642P
23"SAMSUNG OPTION

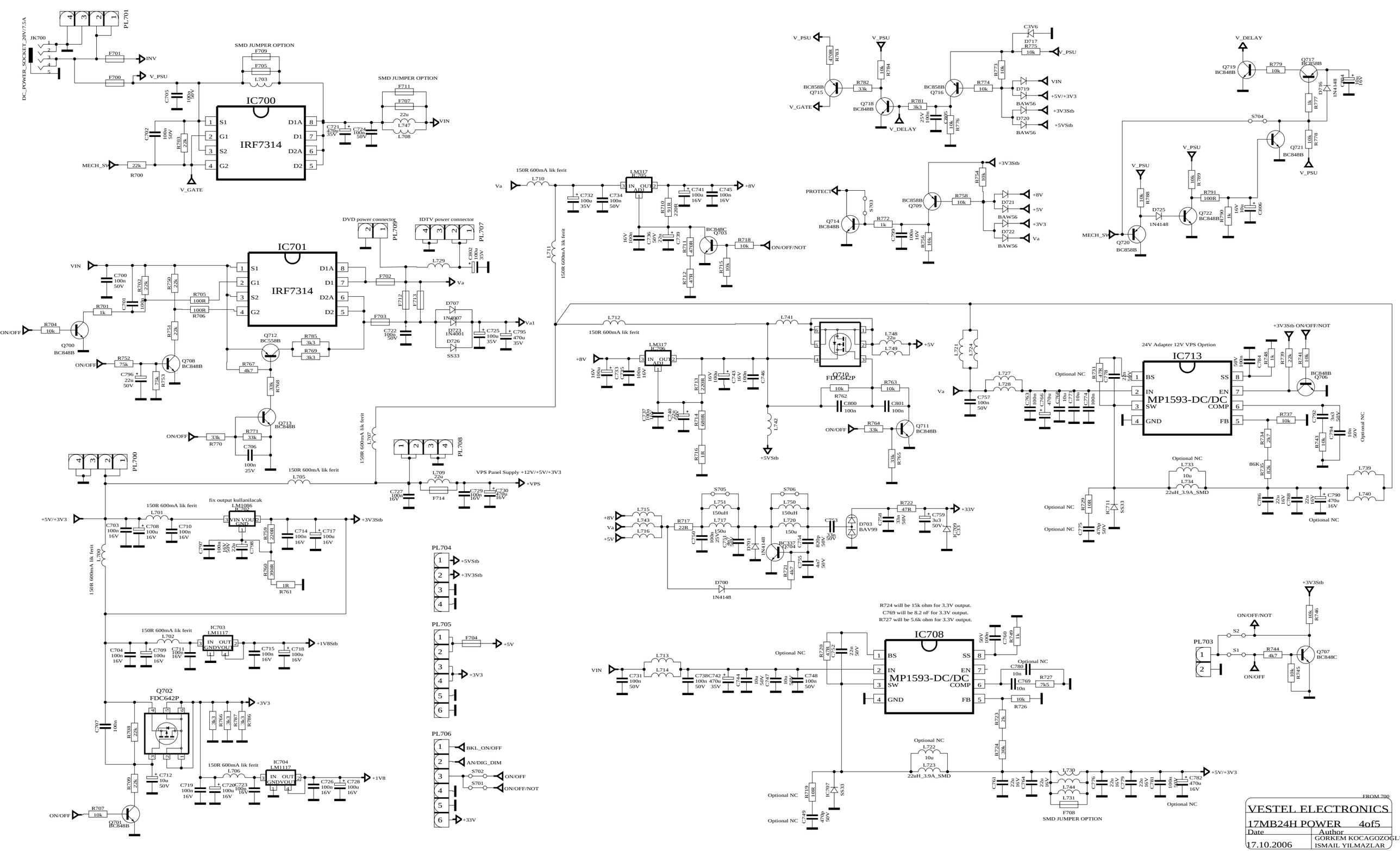
IC700
IRF7314
IC701
IRF7314
IC713
MP1593-DC/DC
IC708
MP1593-DC/DC
Q710
FDC642P
Q702
FDC642P
SMD JUMPER OPTION
DVD power connector
IDTV power connector
24V Adapter 12V VPS Oprtion
Optional NC
VPS Panel Supply +12V/+5V/+3V3
R724 will be 15k ohm for 3.3V output.
C769 will be 8.2 nF for 3.3V output.
R727 will be 5.6k ohm for 3.3V output.
FROM 700
VESTEL ELECTRONICS
17MB24H POWER 4of5
Date
17.10.2006
Author
GORKEM KOCAGOZOGLU
ISMAIL YILMAZLAR

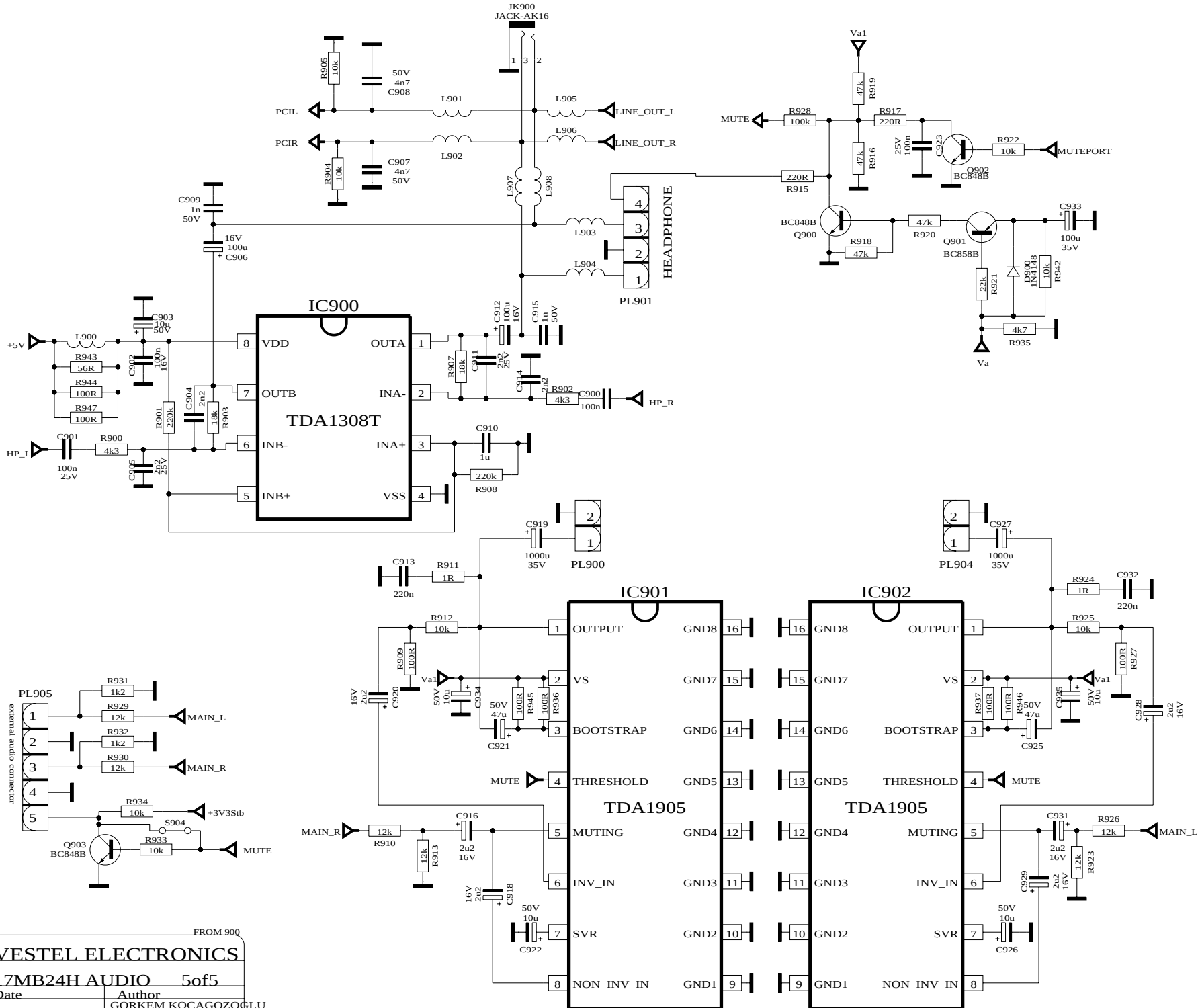
JK900
JACK-AK16
PCIL
PCIR
LINE_OUT_L
LINE_OUT_R
L901
L902
L903
L904
L905
L906
L907
L908
R905 10k
R904 10k
C908 50V 4n7
C907 4n7 50V
C909 1n 50V
C906 16V 100u
HEADPHONE
PL901
IC900
TDA1308T
VDD
OUTA
OUTB
INA-
INB-
INA+
INB+
VSS
+5V
HP_L
HP_R
L900
R943 56R
R944 100R
R947 100R
C903 10u 50V
C902 100n 16V
C901 100n 25V
R900 4k3
R901 220k
C904 2n2
R903 18k
C905 2n2 25V
C912 100u 16V
C915 1n 50V
R907 18k
C911 2n2 25V
C914 2n2
R902 4k3
C900 100n
C910 1u
R908 220k
Va1
MUTE
R928 100k
R917 220R
R919 47k
R916 47k
C923 25V 100n
Q902 BC848B
R922 10k
MUTEPORT
R915 220R
BC848B Q900
R918 47k
R920 47k
Q901 BC858B
C933 100u 35V
R921 22k
D900 1N4148
R942 10k
R935 4k7
Va
PL900
C919 1000u 35V
C913 220n
R911 1R
PL904
C927 1000u 35V
R924 1R
C932 220n
IC901
IC902
TDA1905
OUTPUT
VS
BOOTSTRAP
THRESHOLD
MUTING
INV_IN
SVR
NON_INV_IN
GND8
GND7
GND6
GND5
GND4
GND3
GND2
GND1
R912 10k
R909 100R
C920 16V 2u2
C934 50V 10u
C921 50V 47u
R945 100R
R936 100R
R937 100R
R946 100R
C925 50V 47u
C935 50V 10u
R925 10k
R927 100R
C928 2u2 16V
MAIN_R
R910 12k
R913 12k
C916 2u2 16V
C918 16V 2u2
C922 50V 10u
C926 50V 10u
C931 2u2 16V
R923 12k
C929 2u2 16V
R926 12k
MAIN_L
PL905
external audio connector
R931 1k2
R929 12k
R932 1k2
R930 12k
R934 10k
+3V3Stb
S904
Q903 BC848B
R933 10k
MUTE
FROM 900
VESTEL ELECTRONICS
17MB24H AUDIO 5of5
Date
17.10.2006
Author
GORKEM KOCAGOZOGLU
ISMAIL YILMAZLAR

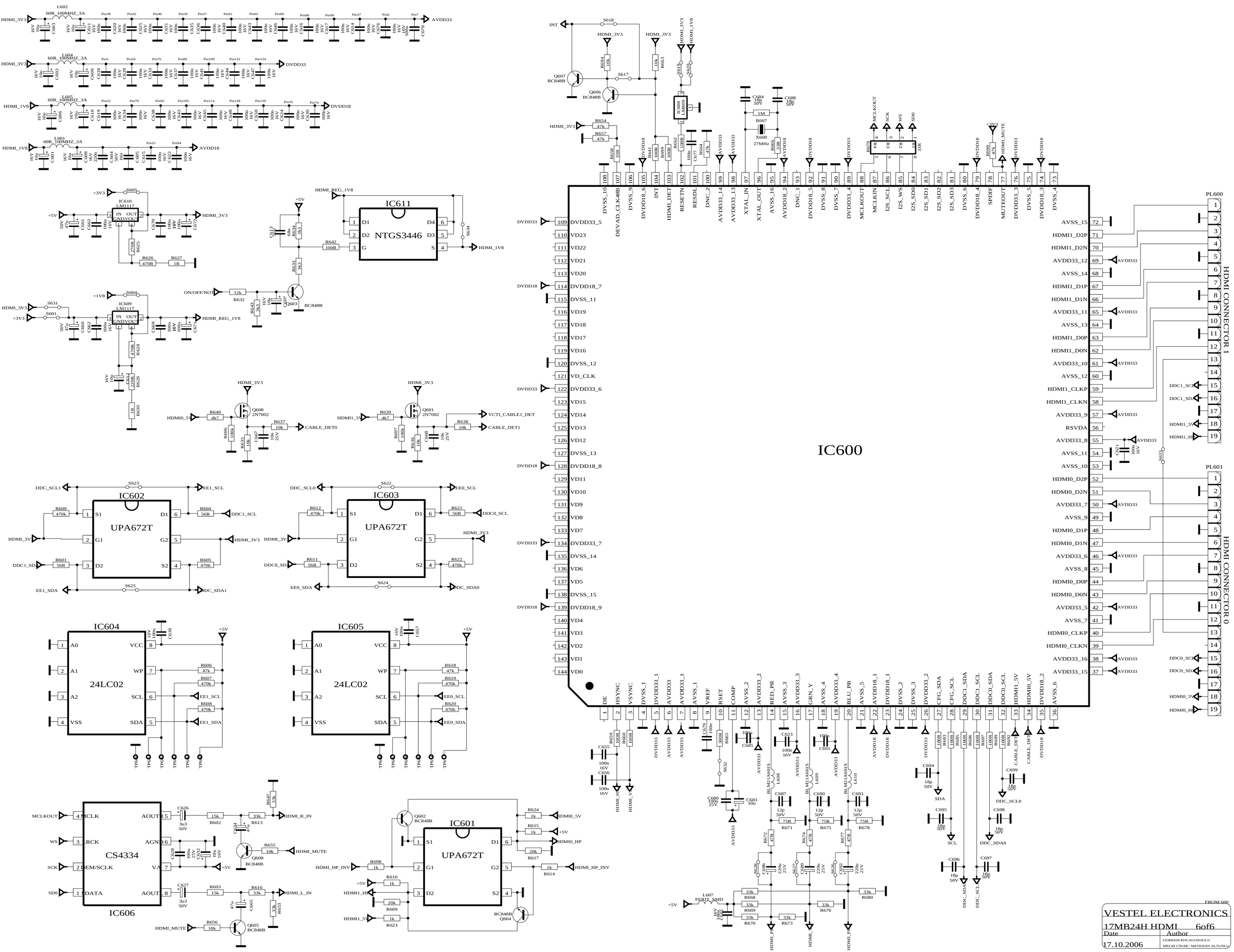
IC600
IC601
IC602
IC603
IC604
IC605
IC606
IC610
IC611
NTGS3446
UPA672T
24LC02
CS4334
LM1117
PL600
PL601
HDMI CONNECTOR 1
HDMI CONNECTOR 0
VESTEL ELECTRONICS
17MB24H HDMI 6of6
Date
17.10.2006
Author
GORKEM KOCAGOZOGLU
MELIH CINAR / METEHAN ALTUNLU

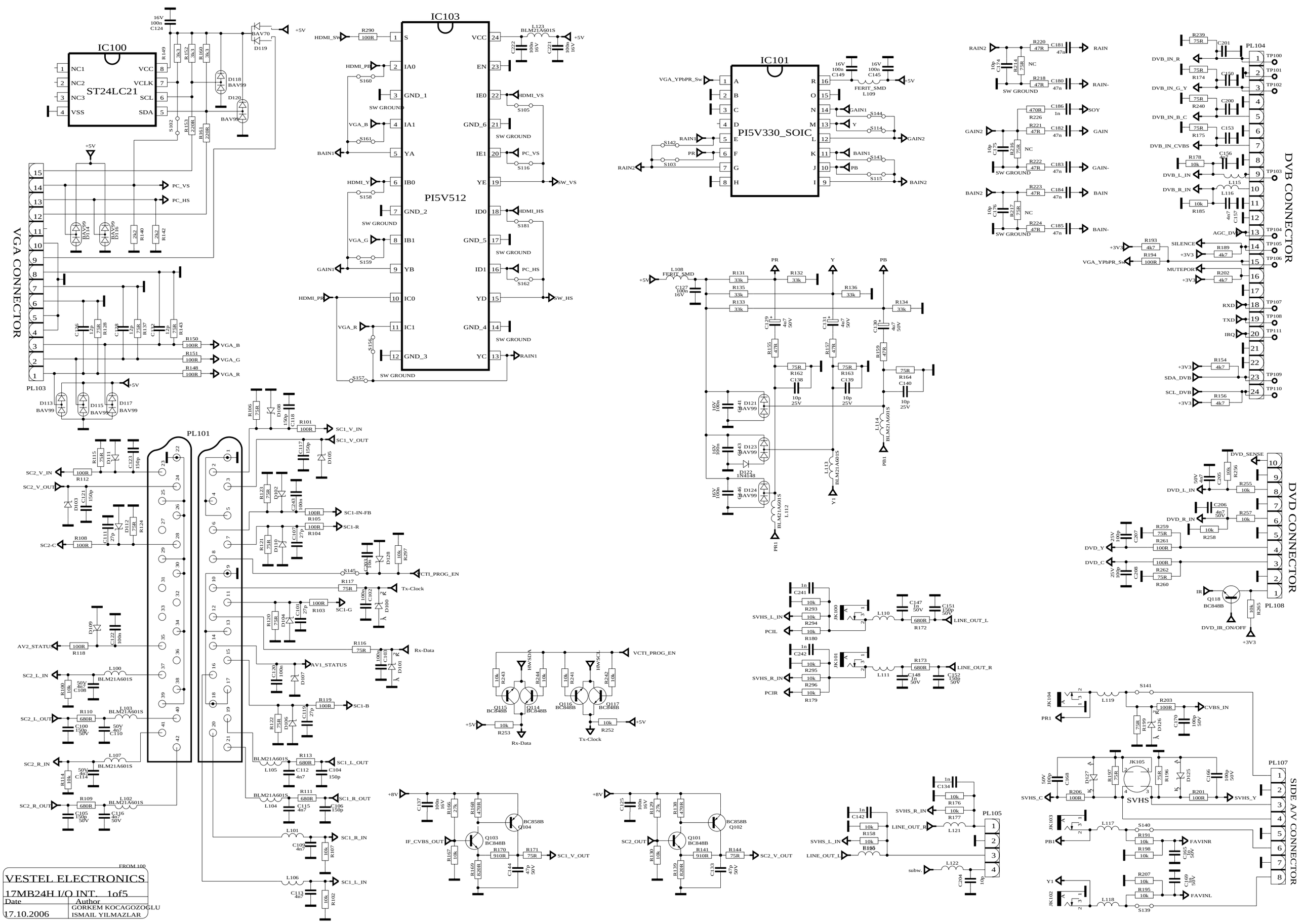
IC100
ST24LC21
IC103
PI5V512
IC101
PI5V330_SOIC
VGA CONNECTOR
DVB CONNECTOR
DVD CONNECTOR
SIDE A/V CONNECTOR
PL101
PL103
PL104
PL105
PL107
PL108
VESTEL ELECTRONICS
17MB24H I/O INT. 1of5
Date
17.10.2006
Author
GORKEM KOCAGOZOGLU
ISMAIL YILMAZLAR

àJ$

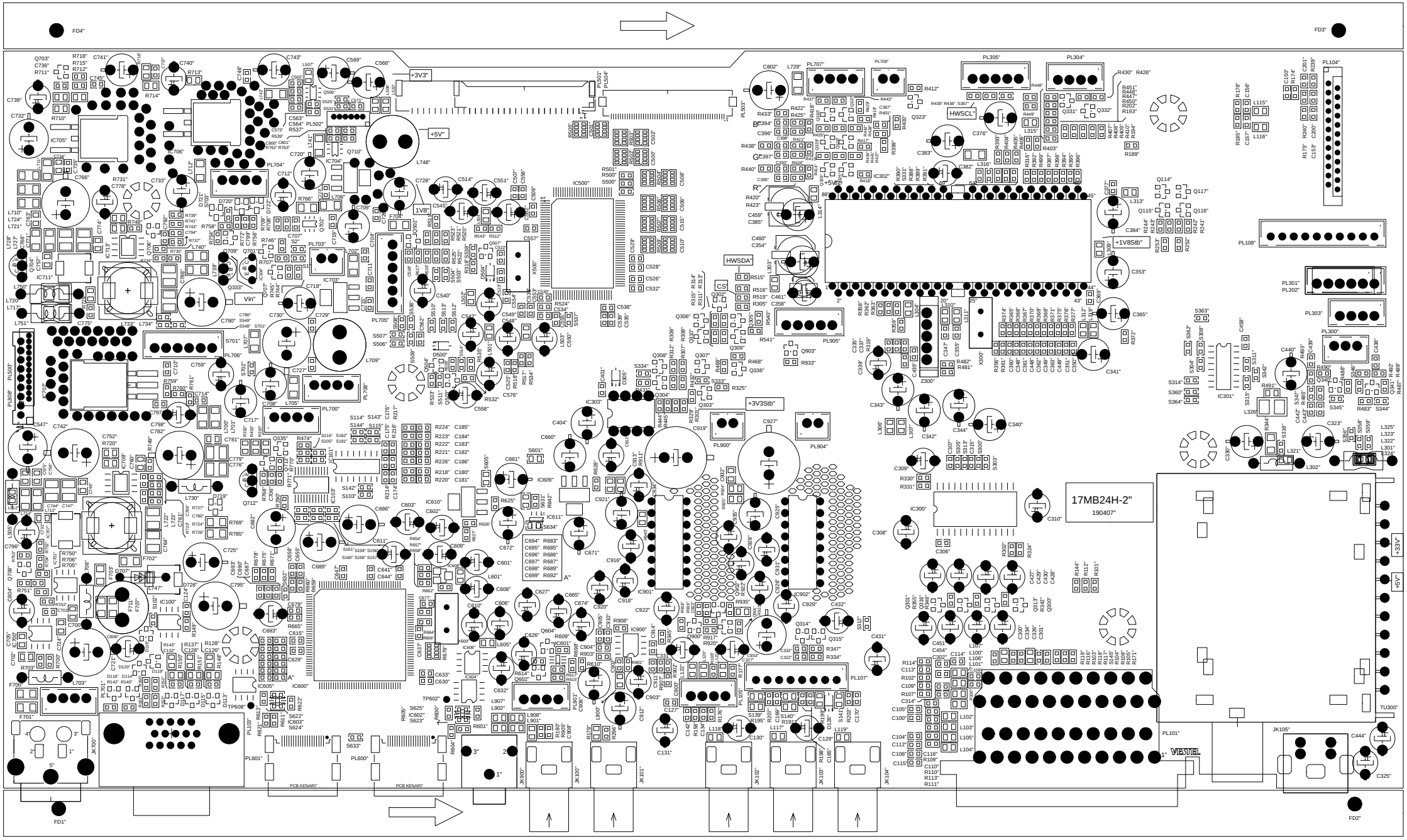
FD4"
FD3"
FD1"
FD2"
+3V3"
+5V"
1V8"
Vin"
HWSCL"
HWSDA"
CS"
+1V8Stb"
+3V3Stb"
-33V"
-5V"
17MB24H-2"
190407"
VESTEL
PC8 KENARI"
PC8 KENARI"

ØH$

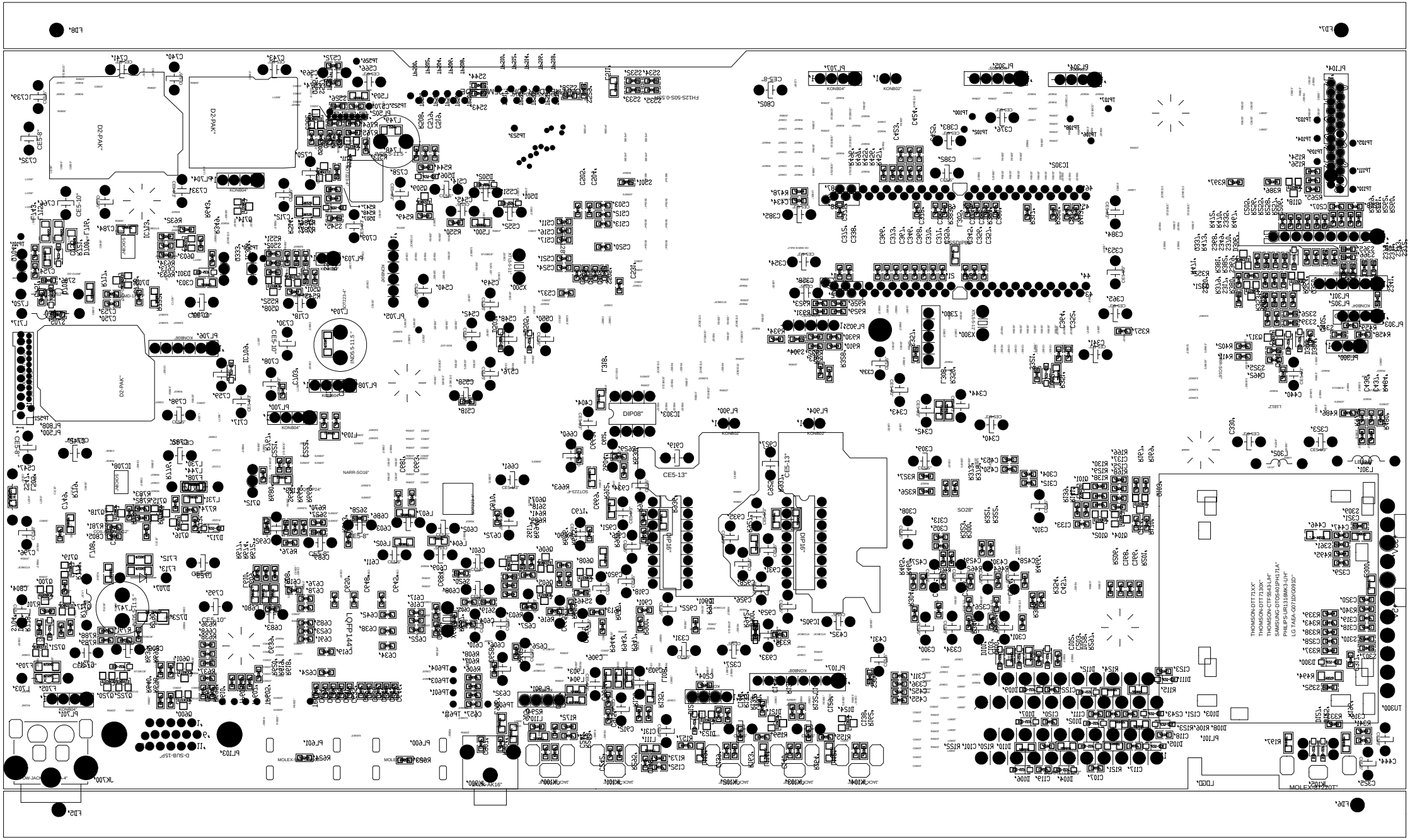
D2-PAK"
D2-PAK"
D-SUB-15F"
D-SUB-15F"
MOLEX-AK16"
MOLEX-AK16"
MOLEX-AK16