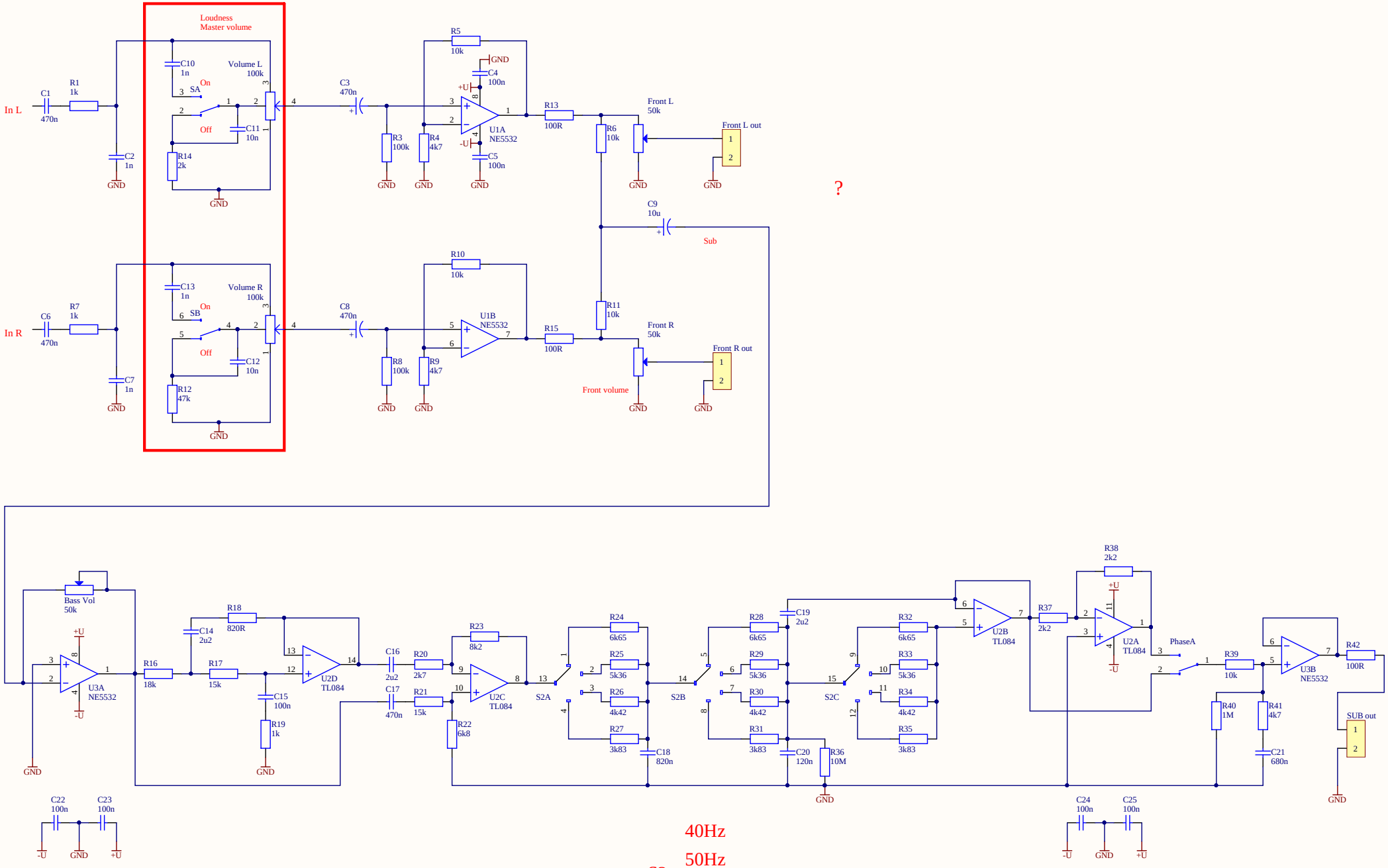

Title		
Size A3	Number	Revision
Date: 2023.01.02.		Sheet of
File: E:\Awork\Sub_21\Sub_21.SchDoc		Drawn By: