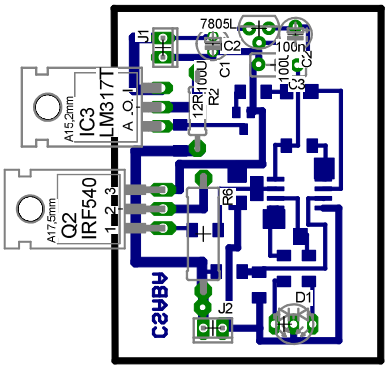
A15.2mm
IC3
LM317T
A O I
A17.5mm
Q2
IRF540
1 2 3
J1
7805L
C1
C2
100U
100U
C3
C2
R2
100U
12R
R6
J2
D1