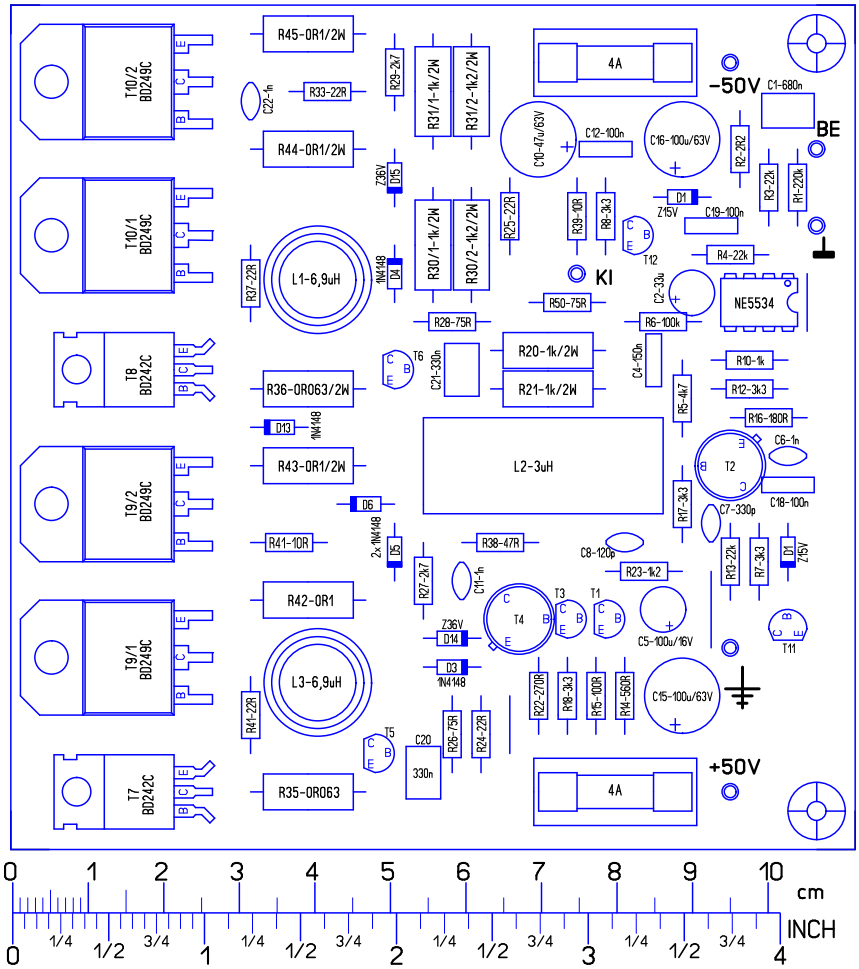
T10/2
BD249C
T10/1
BD249C
T8
BD242C
T9/2
BD249C
T9/1
BD249C
T7
BD242C
R45-0R1/2W
R33-22R
R44-0R1/2W
C22-1n
R29-2k7
R31/1-1k/2W
R31/2-1k2/2W
R30/1-1k/2W
R30/2-1k2/2W
Z36V
D15
D4
1N4148
L1-6,9uH
R37-22R
R36-0R063/2W
D13
1N4148
R43-0R1/2W
D6
R41-10R
2x1N4148
D5
R42-0R1
L3-6,9uH
R41-22R
R35-0R063
T5
C20
330n
R26-75R
R24-22R
R27-2k7
C11-1n
Z36V
D14
D3
1N4148
T4
T3
T1
R38-47R
R25-22R
R28-75R
C21-330n
T6
R20-1k/2W
R21-1k/2W
L2-3uH
4A
C10-47u/63V
C12-100n
C16-100u/63V
-50V
C1-680n
BE
R2-2R2
R3-22k
R1-220k
D1
Z15V
C19-100n
R39-10R
R8-3k3
T12
R4-22k
KI
R50-75R
C2-33u
NE5534
R6-100k
C4-150n
R10-1k
R12-3k3
R5-4k7
R16-180R
C6-1n
T2
C18-100n
C7-330p
R17-3k3
R19-22k
R7-3k3
D11
Z15V
C8-120p
R23-1k2
C5-100u/16V
T11
R22-270R
R18-3k3
R15-100R
R14-560R
C15-100u/63V
+50V
4A

0
1
2
3
4
5
6
7
8
9
10
cm
INCH
1/4
1/2
3/4