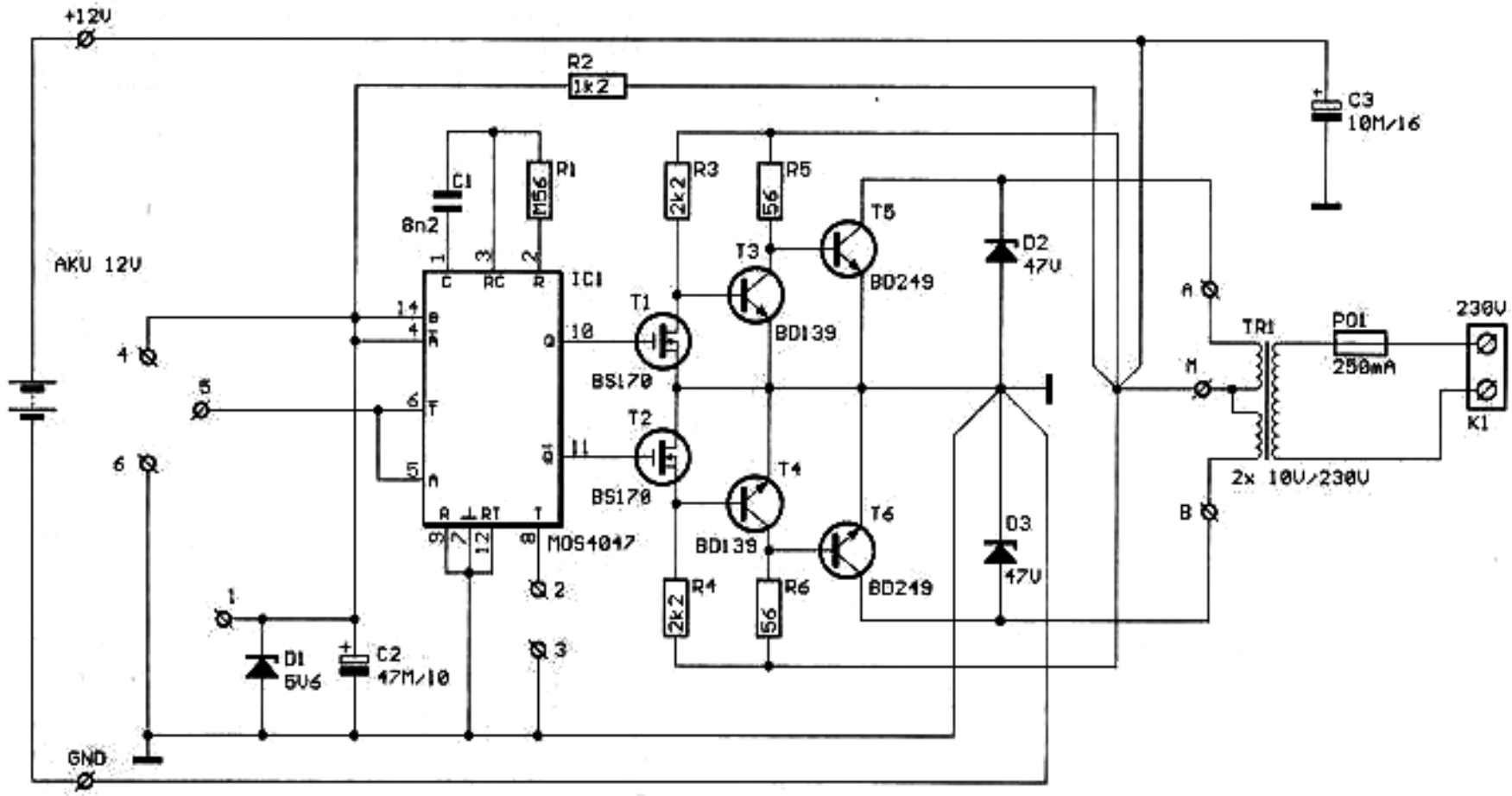
+12V
R2
1k2
C3
10M/16
C1
8n2
R1
M56
R3
2k2
R5
56
T5
BD249
T3
BD139
D2
47V
AKU 12V
IC1
MOS4017
T1
BS170
T2
BS170
T4
BD139
T6
BD249
D3
47V
R4
2k2
R6
56
TR1
2x 10V/230V
POI
250mA
230V
K1
D1
5V6
C2
47M/10
GND