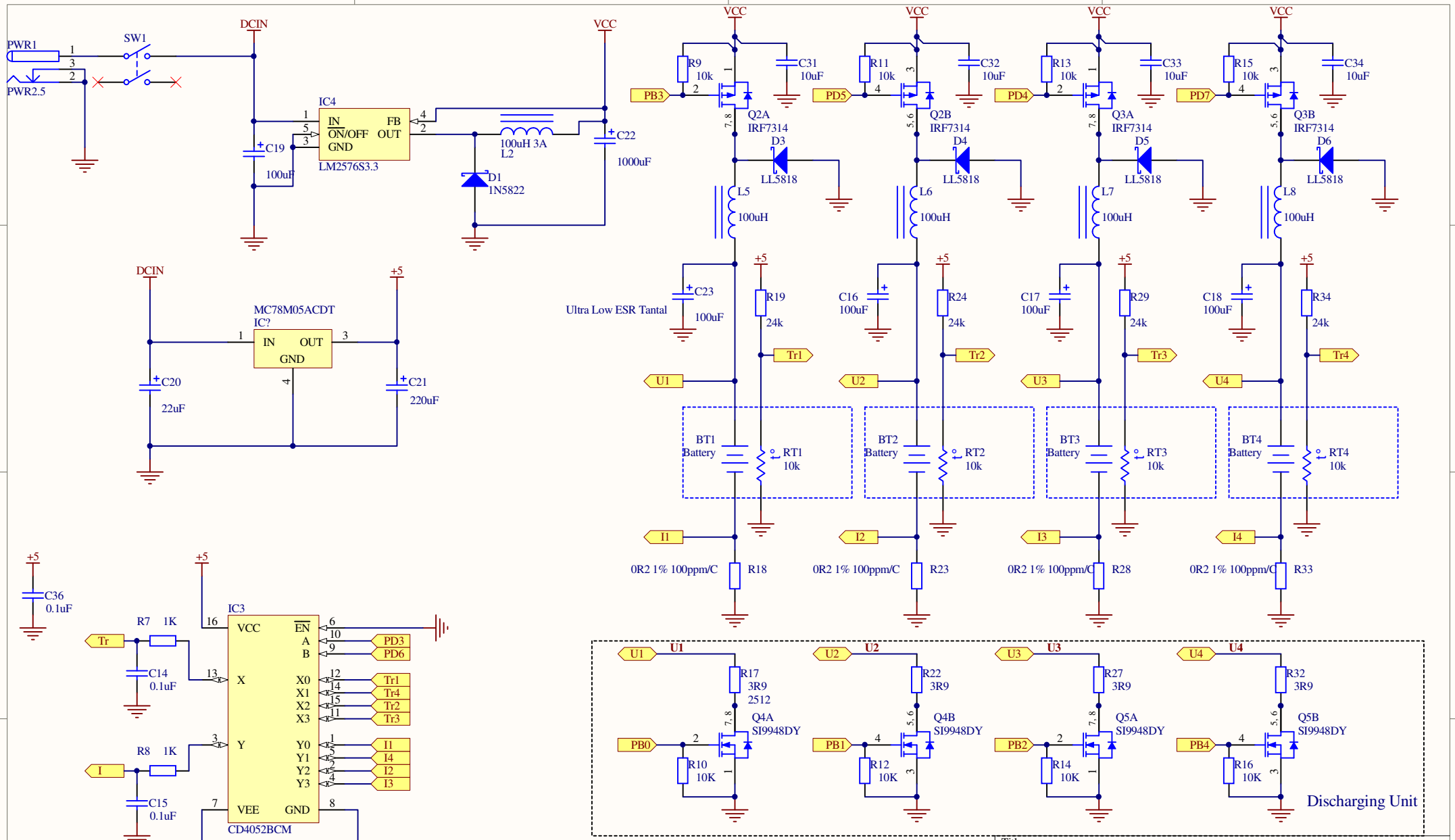
PWR1
PWR2.5
SW1
DCIN
VCC
IC4
IN
ON/OFF
GND
FB
OUT
LM2576S3.3
C19
100uF
100uH 3A
L2
D1
1N5822
C22
1000uF
MC78M05ACDT
IC?
IN
OUT
GND
C20
22uF
C21
220uF
+5
C36
0.1uF
R7 1K
R8 1K
C14
0.1uF
C15
0.1uF
Tr
I
IC3
VCC
EN
A
B
X
X0
X1
X2
X3
Y
Y0
Y1
Y2
Y3
VEE
GND
CD4052BCM
PD3
PD6
Tr1
Tr4
Tr2
Tr3
I1
I4
I2
I3
Current and Temperature measuring selector
R9 10k
R11 10k
R13 10k
R15 10k
C31 10uF
C32 10uF
C33 10uF
C34 10uF
PB3
PD5
PD4
PD7
Q2A IRF7314
Q2B IRF7314
Q3A IRF7314
Q3B IRF7314
D3
D4
D5
D6
LL5818
L5
L6
L7
L8
100uH
Ultra Low ESR Tantal
C23 100uF
C16 100uF
C17 100uF
C18 100uF
R19 24k
R24 24k
R29 24k
R34 24k
U1
U2
U3
U4
BT1 Battery
BT2 Battery
BT3 Battery
BT4 Battery
RT1 10k
RT2 10k
RT3 10k
RT4 10k
0R2 1% 100ppm/C
R18
R23
R28
R33
R17 3R9 2512
R22 3R9
R27 3R9
R32 3R9
Q4A SI9948DY
Q4B SI9948DY
Q5A SI9948DY
Q5B SI9948DY
PB0
PB1
PB2
PB4
R10 10K
R12 10K
R14 10K
R16 10K
Discharging Unit
Title
Charger V2
Size
A4
Number
3. Töltő egység
Revision
V2.0
Date: 2009.01.28.
Sheet 3 of 4
File: D:\Project\..\Charger V3_Power_Unit.SCHDOC
Drawn By: DrKonor