Dual-Channel Digital Volume Control

SHEENA K.

This circuit could be used for replacing your manual volume control in a stereo amplifier. In this circuit, push-to-on switch S1 controls the forward (volume increase) operation of both channels while a similar switch S2 controls reverse (volume decrease) operation of both channels.

Here IC1 timer 555 is configured as an astable flip-flop to provide low-frequency pulses to up/down clock input pins of pre-setable up/down counter 74LS193 (IC2) via push-to-on switches S1 and S2. To vary the pulse width of pulses from IC1, one may replace timing resistor R1 with a variable resistor.

Operation of switch S1 (up) causes the binary output to increment while operation of S2 (down) causes the binary output to decrement. The maximum count being 15 (all outputs logic 1) and minimum count being 0 (all outputs logic 0), it results in maximum and minimum volume respectively.
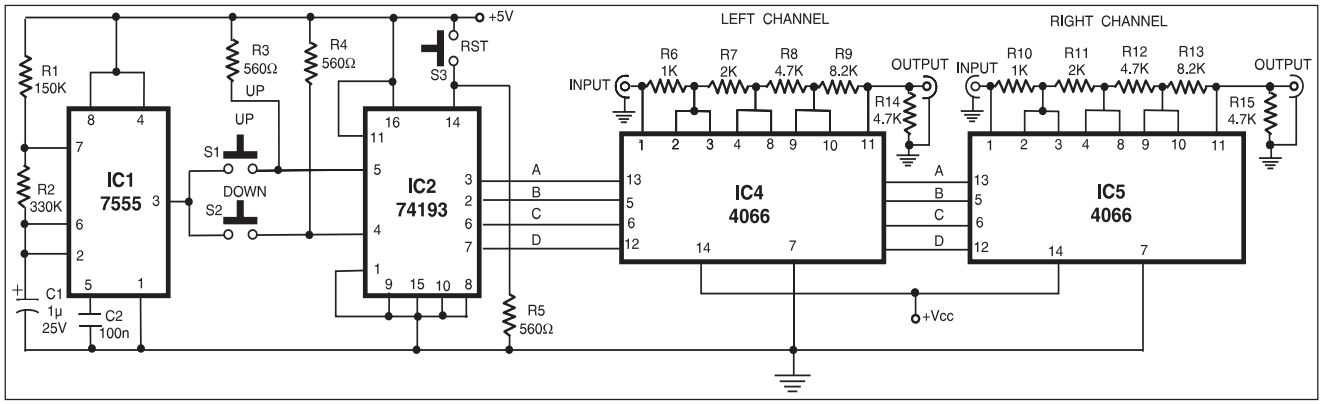
The active high outputs A, B, C and D of the counter are used for controlling two quad bi-polar analogue switches in each of the two CD4066 ICs (IC3 and IC4). Each of the output bits, when high, short a part of the resistor network comprising series resistors R6 through R9 for one channel and R10 through R13 for the other channel, and thereby control the output of the audio signals being fed to the inputs of stereo amplifier. Push-to-on switch S3 is used for resetting the output of counter to 0000, and thereby turning the volume of both channels to the minimum level.