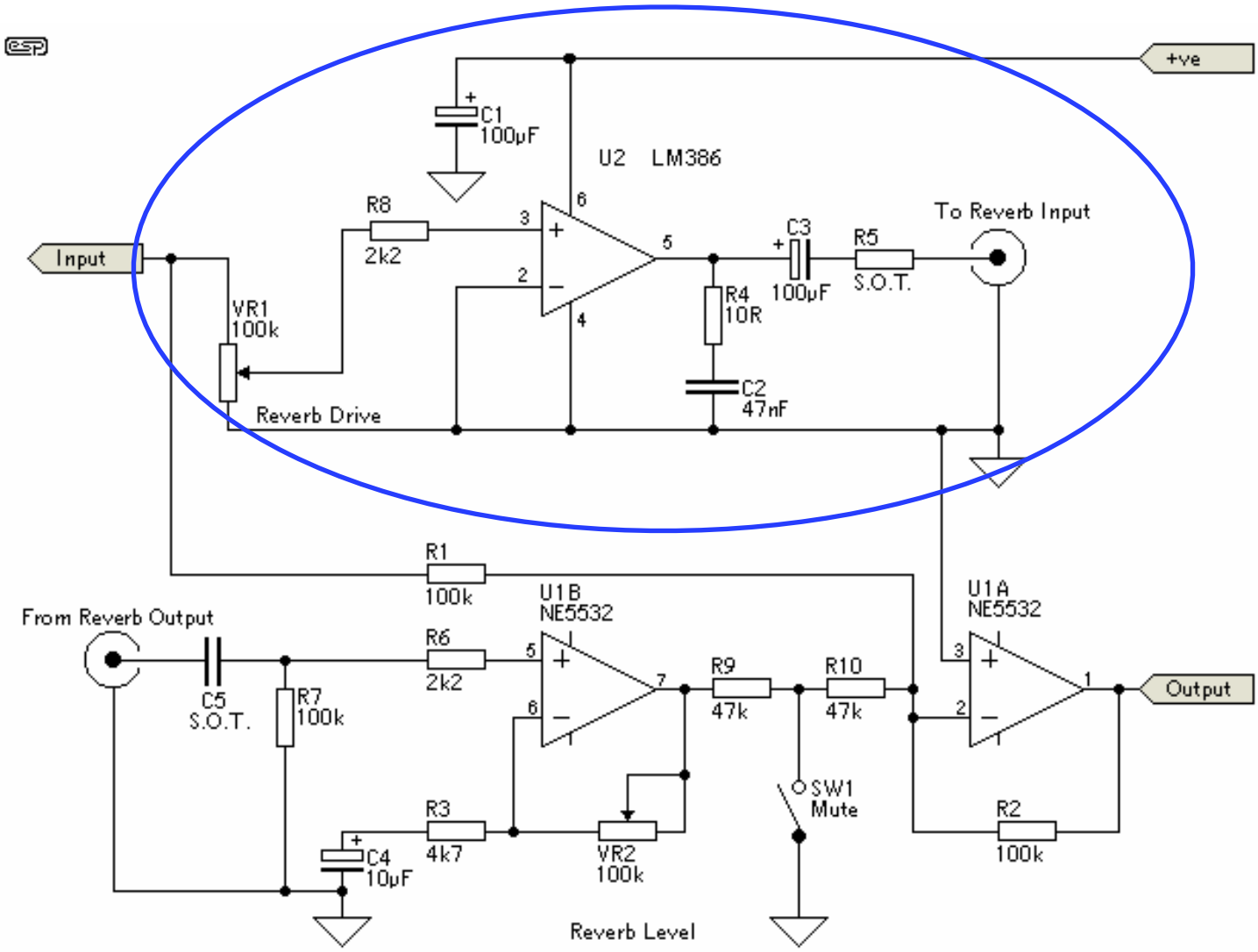
+ve
C1
100µF
U2 LM386
R8
2k2
Input
VR1
100k
Reverb Drive
C3
100µF
R5
S.O.T.
To Reverb Input
R4
10R
C2
47nF
R1
100k
U1B
NE5532
U1A
NE5532
From Reverb Output
C5
S.O.T.
R7
100k
R6
2k2
R9
47k
R10
47k
Output
SW1
Mute
R3
4k7
C4
10µF
VR2
100k
Reverb Level
R2
100k