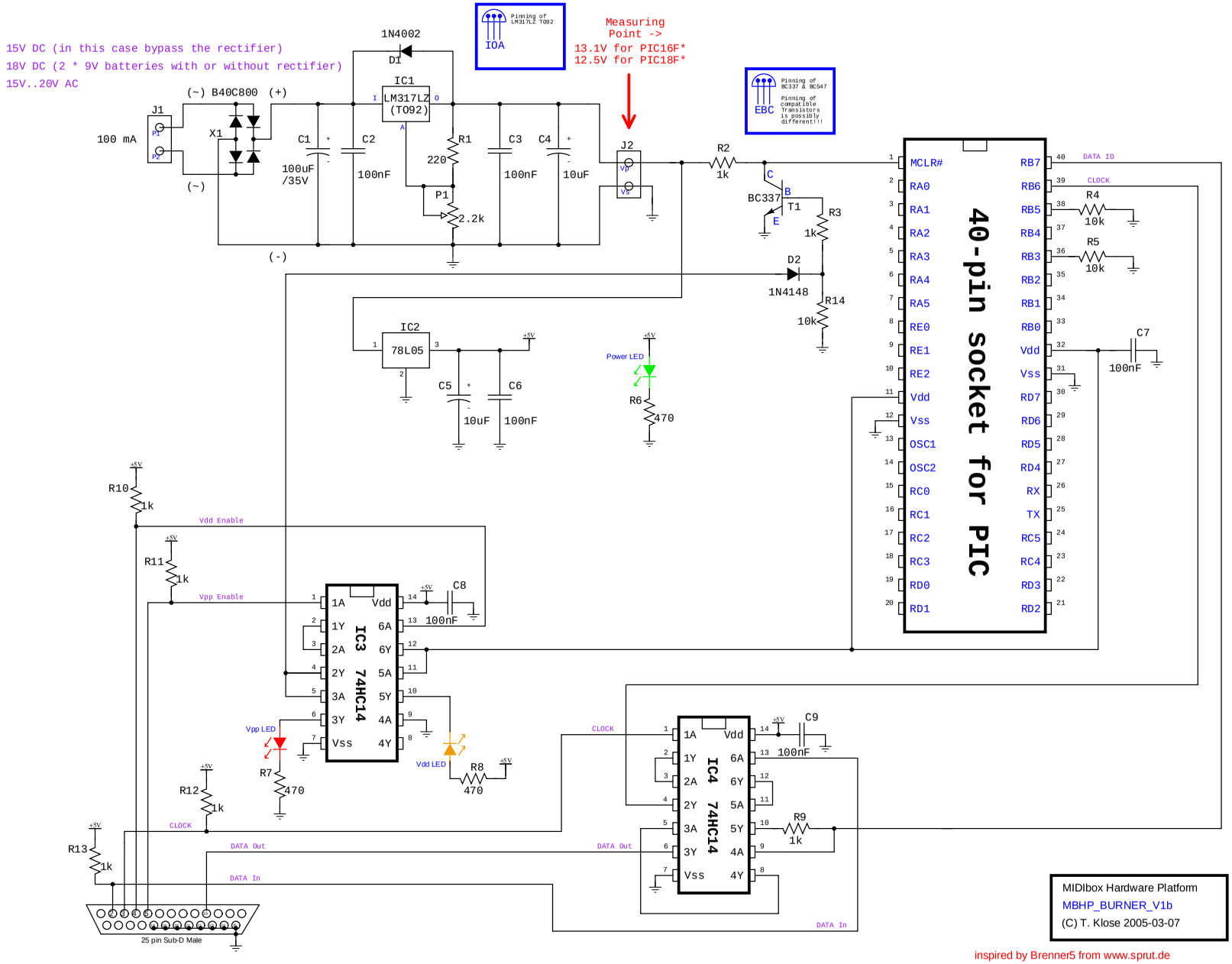
15V DC (in this case bypass the rectifier)
18V DC (2 * 9V batteries with or without rectifier)
15V..20V AC
(~) B40C800 (+)
(-)
J1
100 mA
X1
C1
100uF /35V
C2
100nF
1N4002
D1
IC1
LM317LZ (TO92)
R1
220
P1
2.2k
C3
100nF
C4
10uF
J2
Measuring Point ->
13.1V for PIC16F*
12.5V for PIC18F*
IOA
Pinning of LM317LZ TO92
EBC
Pinning of BC337 & BC547
Pinning of compatible Transistors is possibly different!!!
R2
1k
BC337
T1
R3
1k
D2
1N4148
R14
10k
IC2
78L05
C5
10uF
C6
100nF
Power LED
R6
470
40-pin socket for PIC
MCLR#
RA0
RA1
RA2
RA3
RA4
RA5
RE0
RE1
RE2
Vdd
Vss
OSC1
OSC2
RC0
RC1
RC2
RC3
RD0
RD1
RB7
RB6
RB5
RB4
RB3
RB2
RB1
RB0
Vdd
Vss
RD7
RD6
RD5
RD4
RX
TX
RC5
RC4
RD3
RD2
DATA IO
CLOCK
R4
10k
R5
10k
C7
100nF
R10
1k
Vdd Enable
R11
1k
Vpp Enable
IC3
74HC14
C8
100nF
Vpp LED
R7
470
Vdd LED
R8
470
R12
1k
CLOCK
R13
1k
DATA Out
DATA In
IC4
74HC14
C9
100nF
R9
1k
25 pin Sub-D Male
MIDIbox Hardware Platform
MBHP_BURNER_V1b
(C) T. Klose 2005-03-07
inspired by Brenner5 from www.sprut.de
and PICProg from Martin Clausen (www.rotgradpsi.de/mc)