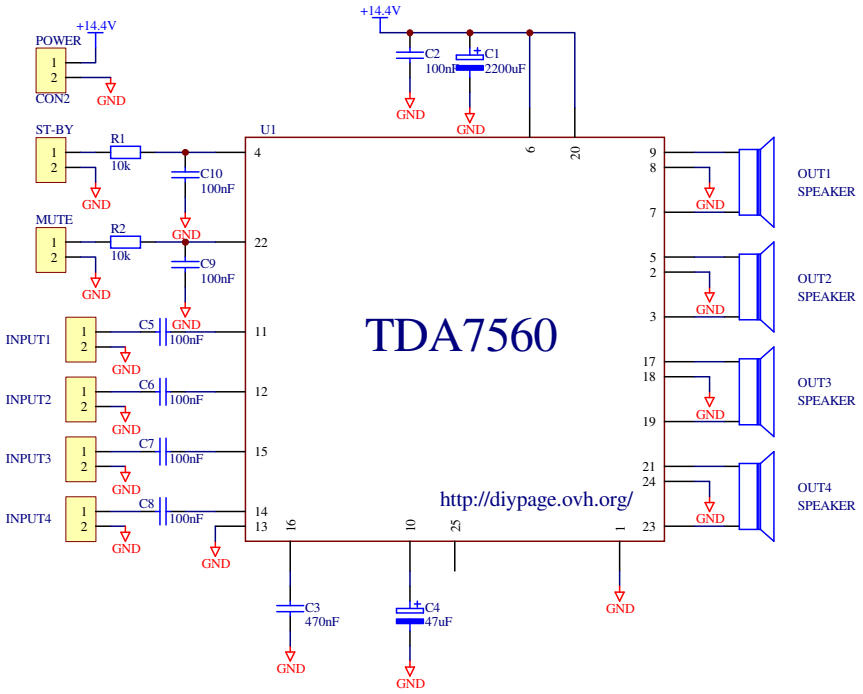

Title	POWER AMPLIFIER TDA7560	
Size B	Number	Revision
Date: 14-Oct-2007		Sheet of
File: C:\TDA7560.ddb		Drawn By: MKOZLI