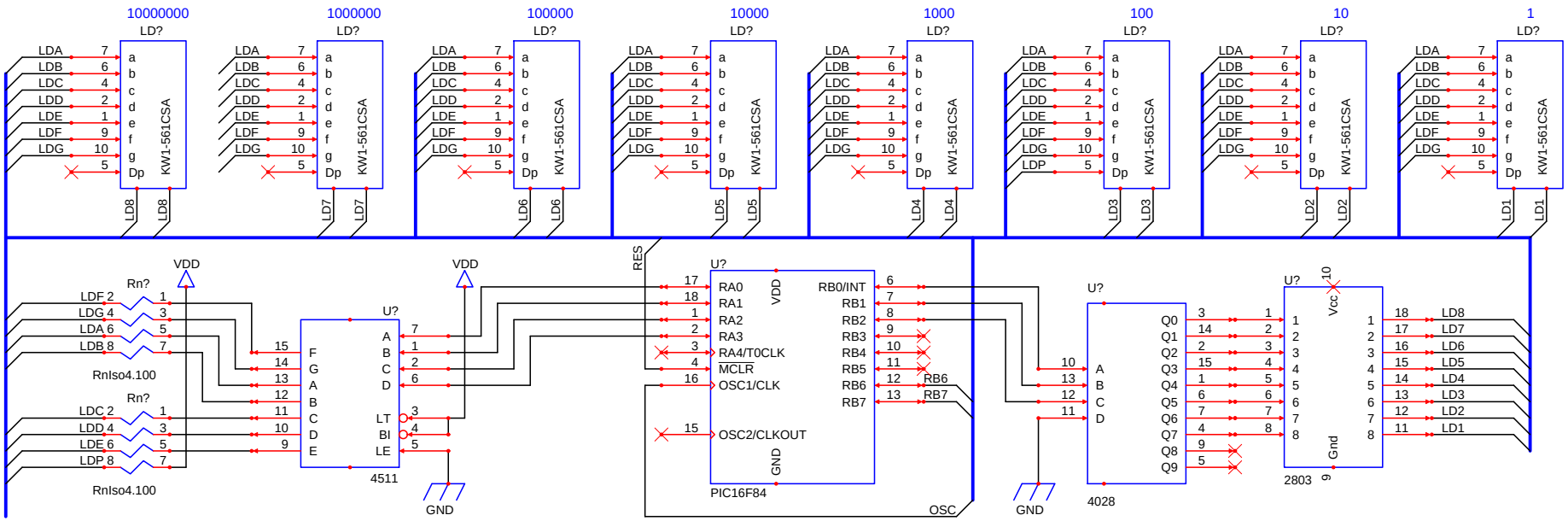

Microcad		
Title: High Frequency Radio Amplifier		
Project: RadioAmp	File: Root.sch	Page: 1/1
Number: Doc. Number	Date: Jan. 20, 2005	Rev. : 1.0