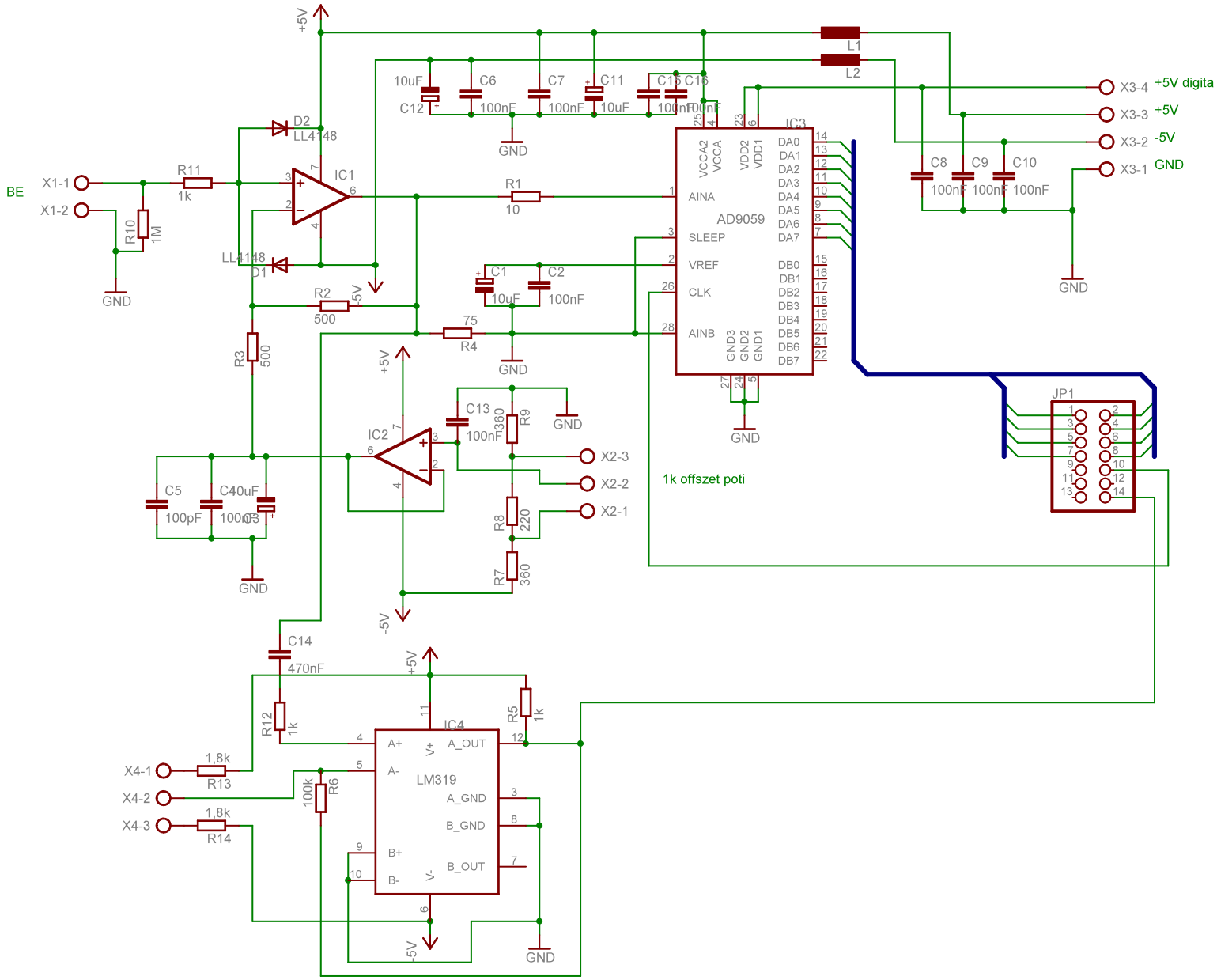
+5V
L1
L2
X3-4 +5V digita
X3-3 +5V
X3-2 -5V
X3-1 GND
10uF
C12
C6
100nF
C7
100nF
C11
10uF
C15 C16
100nF 100nF
GND
D2
LL4148
BE
X1-1
X1-2
R11
1k
R10
1M
IC1
LL4148
D1
R2
500
-5V
R3
500
R1
10
C1
10uF
C2
100nF
R4
75
IC3
AD9059
VCCA2
VCCA
VDD2
VDD1
AINA
SLEEP
VREF
CLK
AINB
GND3
GND2
GND1
DA0
DA1
DA2
DA3
DA4
DA5
DA6
DA7
DB0
DB1
DB2
DB3
DB4
DB5
DB6
DB7
C8
100nF
C9
100nF
C10
100nF
JP1
1k offszet poti
IC2
C13
100nF
R9
360
X2-3
X2-2
X2-1
R8
220
R7
360
C5
100pF
C4
100nF
C3
10uF
C14
470nF
R12
1k
R5
1k
IC4
LM319
A+
A-
B+
B-
V+
V-
A_OUT
A_GND
B_GND
B_OUT
X4-1
X4-2
X4-3
1,8k
R13
1,8k
R14
100k
R6